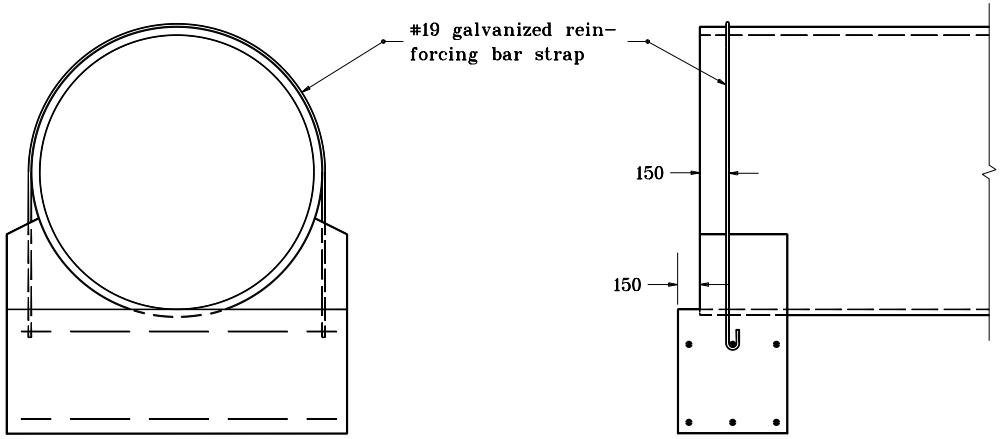

#19 REINFORCING BAR STRAP DETAILS

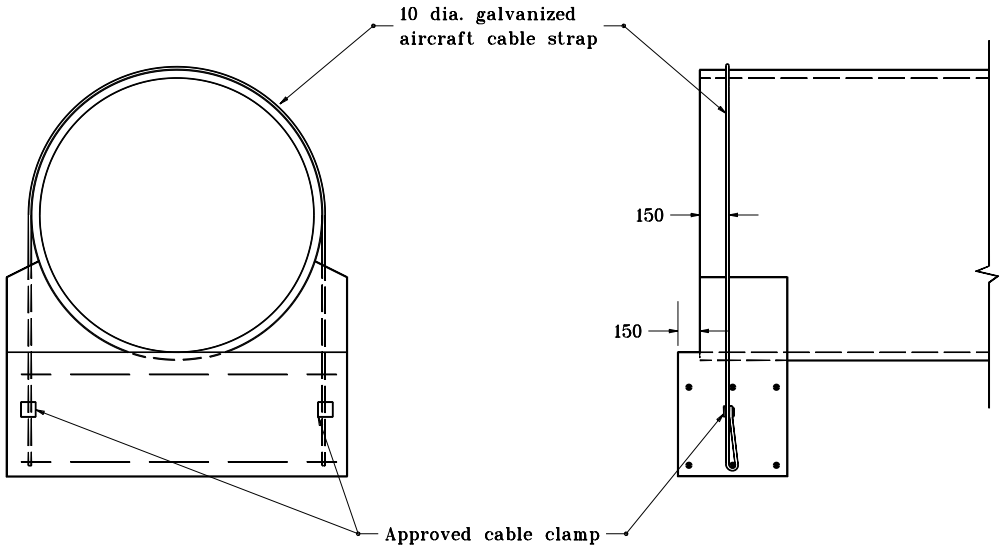

10 mm AIRCRAFT CABLE STRAP DETAILS

GENERAL NOTES

1. Anchor straps shall be used at both upstream and downstream ends of all C.A., C.S., and structural plate pipes and pipe arches with a diameter or span of 1050 mm or greater.
2. Hook bolts and anchor straps shall be used at both upstream and downstream ends of all C.A., C.S., and structural plate pipes and pipe arches with a diameter or span of 2100 mm or greater.
3. See Standard Drawing 715-PAHB-01 for hook bolt details.
4. Riprap shall be placed at the ends of pipe structures when shown on the plans.

All dimensions are in mm unless otherwise specified.

INDIANA DEPARTMENT OF TRANSPORTATION

PIPE ANCHOR STRAP DETAILS

JANUARY 1998

STANDARD DRAWING NO. **715-PASD-01**

ANTHONY L. UREMOVICH REGISTERED No. 18095 STATE OF INDIANA PROFESSIONAL ENGINEER

DESIGN STANDARDS ENGINEER

/s/ Anthony L. Uremovich 1-02-98
DESIGN STANDARDS ENGINEER DATE

/s/ Donald W. Lucas 1-02-98
CHIEF HIGHWAY ENGINEER DATE

Source Sheet: ME1