GENERAL NOTES

1. Hook bolts and anchor straps shall be used at both upstream and downstream ends of all C.A., C.S., and structural plate pipes and pipe diameter or span of 2100 or greater.

2. See Standard Drawing 715-PASD-01 for anchor strap details.

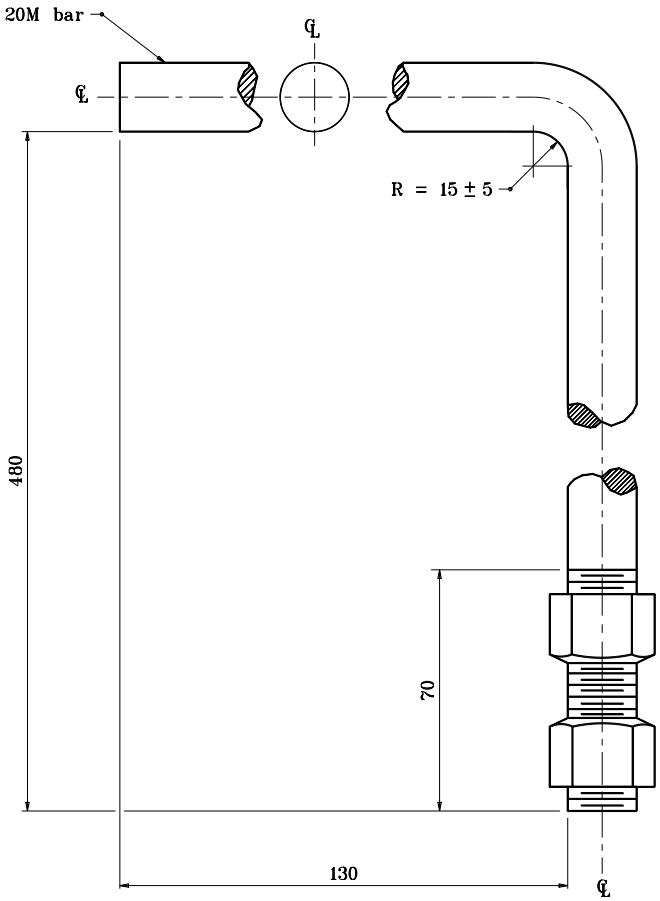

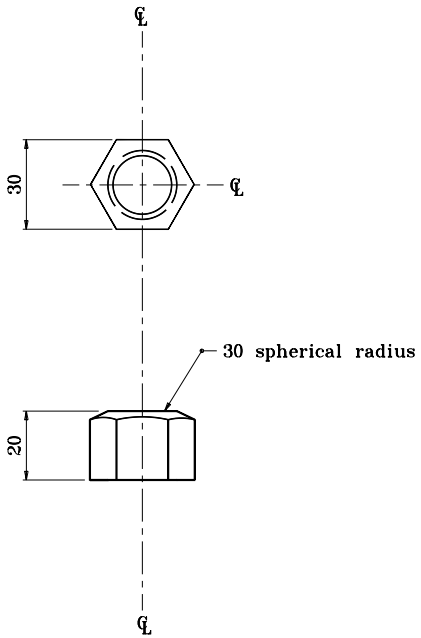

GALVANIZED
HOOK BOLT AND NUTS

All dimensions are in mm unless otherwise specified.

INDIANA DEPARTMENT OF TRANSPORTATION

PIPE ANCHOR HOOK
BOLT DETAILS

APRIL 1995

STANDARD DRAWING NO. **715-PAHB-01**

ANTHONY L. UREMOVICH REGISTERED No. 18095 STATE OF INDIANA PROFESSIONAL ENGINEER

DESIGN STANDARDS ENGINEER

/s/ Anthony L. Uremovich 4-03-95
DESIGN STANDARDS ENGINEER DATE

/s/ Donald W. Lucas 4-03-95
CHIEF HIGHWAY ENGINEER DATE

Source Sheet: ME1