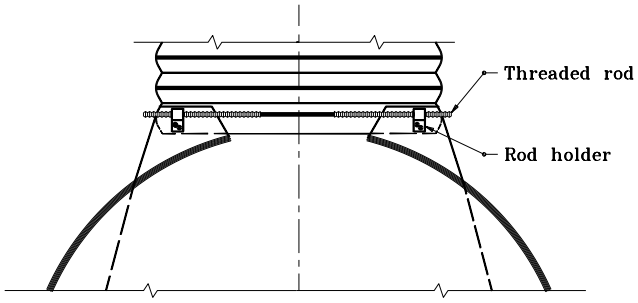

TYPE 1
FOR 430 x 330 THROUGH 1060 x 740 ONLY

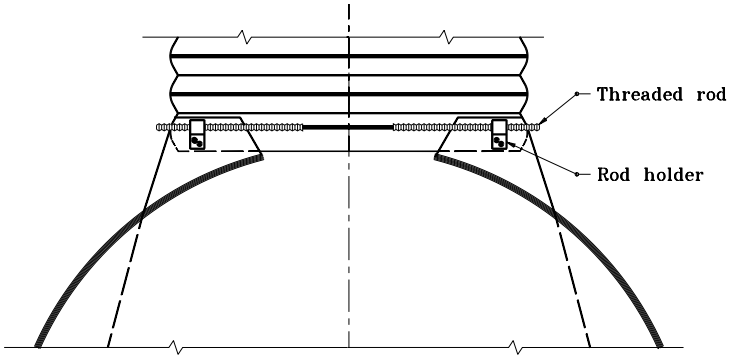

TYPE 4
FOR 750 THROUGH 900 ONLY

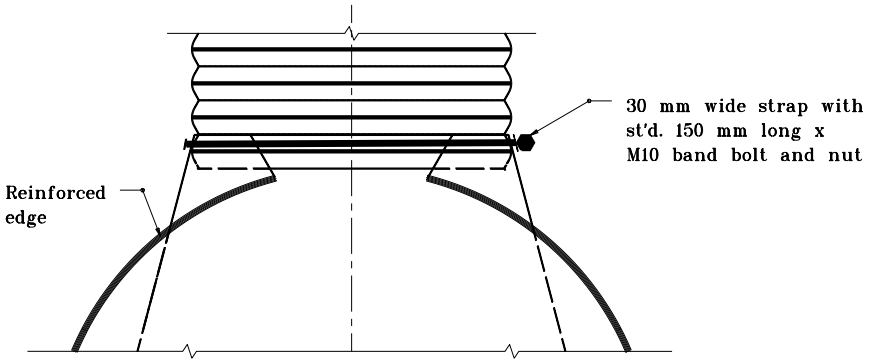

ALTERNATE TYPE 3
FOR 300 THROUGH 600 ONLY

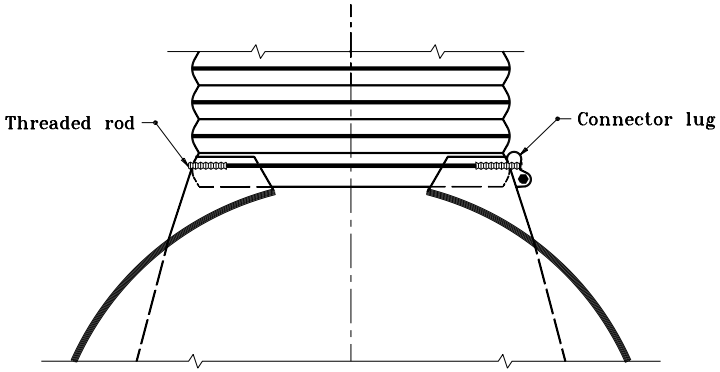

TYPE 3
FOR 300 THROUGH 600 ONLY

All dimensions are in mm unless otherwise specified.

INDIANA DEPARTMENT OF TRANSPORTATION

METAL PIPE END SECTION CONNECTIONS

JANUARY 1998

STANDARD DRAWING NO. 715-MPES-03

ANTHONY L. UREMOVICH REGISTERED No. 18095 STATE OF INDIANA PROFESSIONAL ENGINEER

DESIGN STANDARDS ENGINEER

/s/ Anthony L. Uremovich 1-02-98
DESIGN STANDARDS ENGINEER DATE

/s/ Donald W. Lucas 1-02-98
CHIEF HIGHWAY ENGINEER DATE

Source Sheet: ME2