PIPE DIA.	END SECTION THICK.	DIMENSIONS					APPROX. SLOPE	BODY
		A	B	H	L	W		
		(±25)	(Max.)	(±25)	(±40)	(±50)		
300	1.63	150	150	150	530	610	2.5 : 1	1 Pc.
375	1.63	180	200	150	660	760	2.5 : 1	1 Pc.
450	1.63	200	250	150	790	910	2.5 : 1	1 Pc.
525	1.63	230	310	150	910	1070	2.5 : 1	1 Pc.
600	1.63	250	330	150	1040	1220	2.5 : 1	1 Pc.
750	2.01	310	410	200	1300	1520	2.5 : 1	1 Pc.
900	2.01	360	480	230	1520	1830	2.5 : 1	2 Pc.

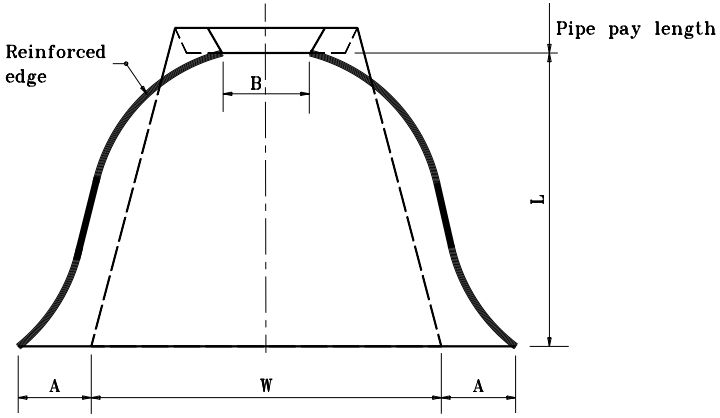

PLAN VIEW

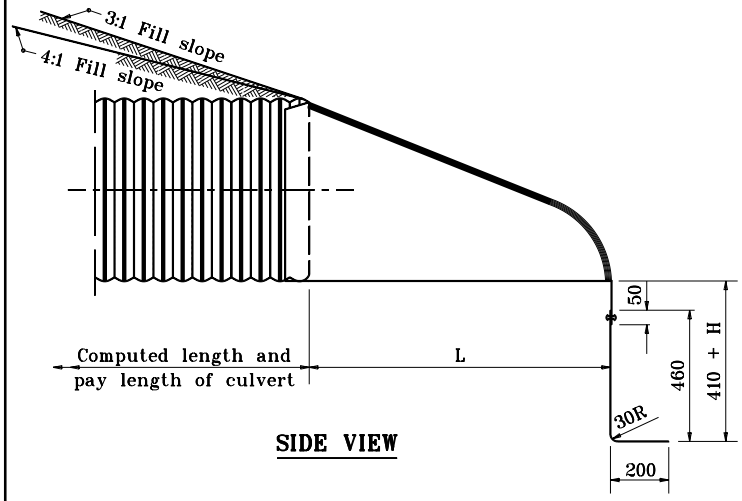

SIDE VIEW

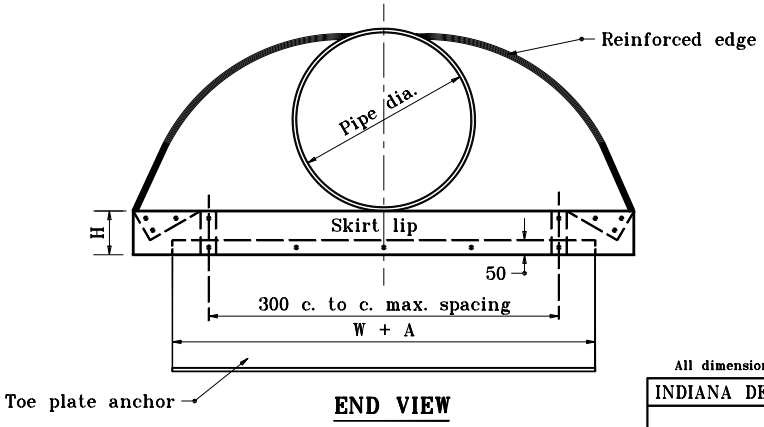

END VIEW

All dimensions are in mm unless otherwise specified.

INDIANA DEPARTMENT OF TRANSPORTATION

METAL PIPE END SECTION

JANUARY 1998

STANDARD DRAWING NO. 715-MPES-01

ANTHONY L. UREMOVICH REGISTERED No. 18095 STATE OF INDIANA PROFESSIONAL ENGINEER

DESIGN STANDARDS ENGINEER

/s/ Anthony L. Uremovich 1-02-98
DESIGN STANDARDS ENGINEER DATE

/s/ Donald W. Lucas 1-02-98
CHIEF HIGHWAY ENGINEER DATE

Source Sheet: ME2