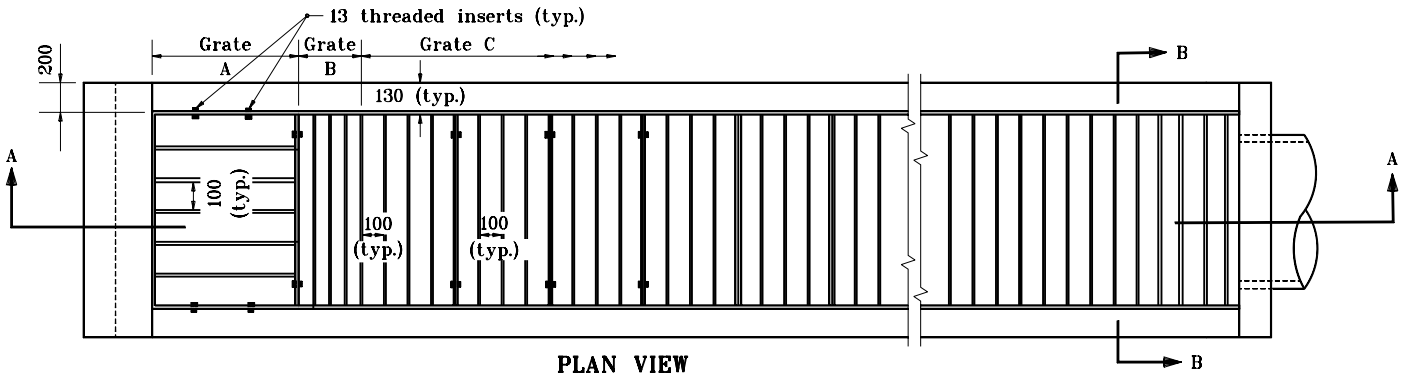

PLAN VIEW

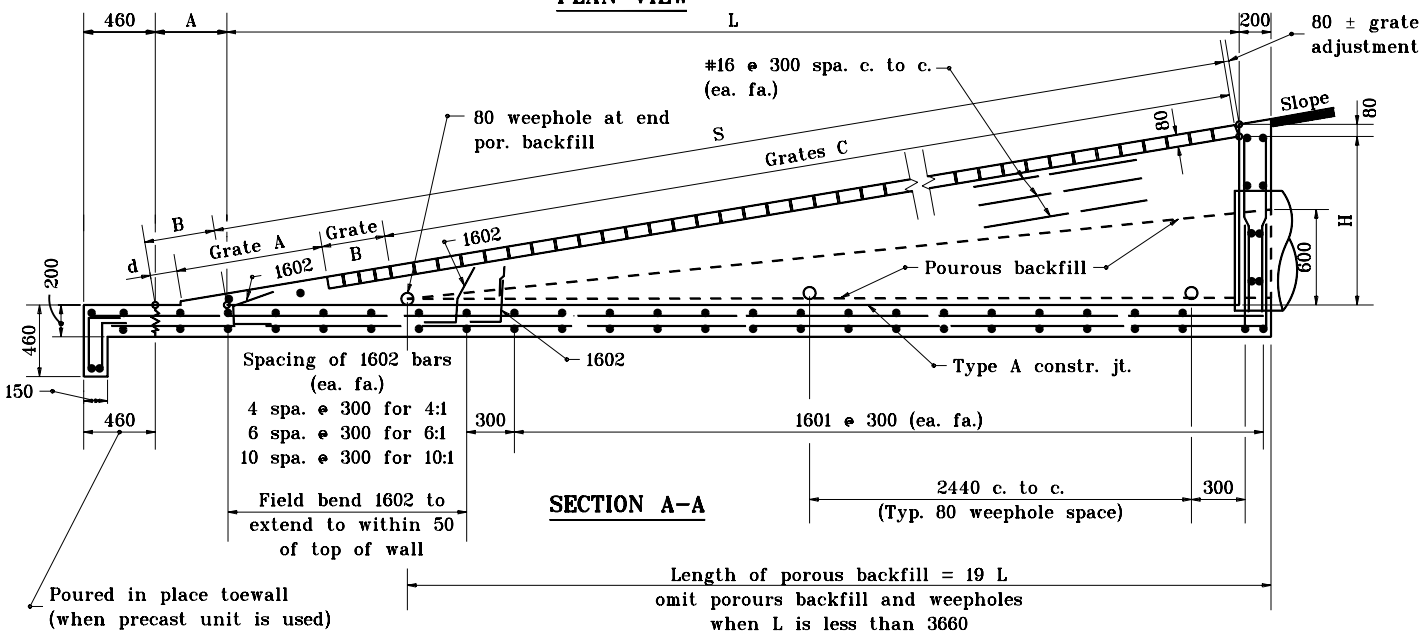

SECTION A–A

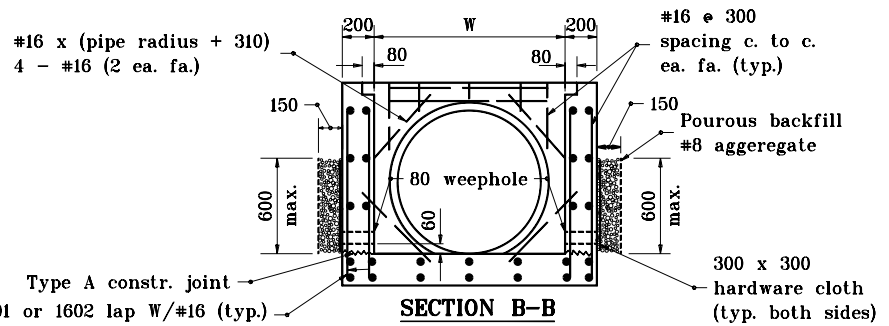

SECTION B–B

GENERAL NOTES

1. The invert grade of the grated box end section shall be the same as that of the pipe.
2. See Standard Drawings 715–GBTT–05 and –06 for dimensions tables.
3. Type II grated box end sections shall be used for culverts parallel to the mainline within the clear zone.
4. See Standard Drawing 715–GBTT–02 for bending diagrams.

All dimensions are in mm unless otherwise specified.

INDIANA DEPARTMENT OF TRANSPORTATION

GRATED BOX END SECTION TYPE II

JANUARY 1999

STANDARD DRAWING NO. **715–GBTT–01**

ANTHONY L. UREMOVICH REGISTERED No. 18095 STATE OF INDIANA PROFESSIONAL ENGINEER

/s/ Anthony L. Uremovich 1-04-99
DESIGN STANDARDS ENGINEER DATE

/s/ Donald W. Lucas 1-04-99
CHIEF HIGHWAY ENGINEER DATE

DESIGN STANDARDS ENGINEER

Source Sheet: GBES 3