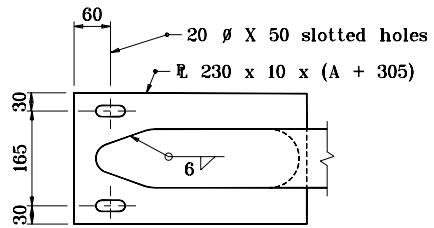

PLAN

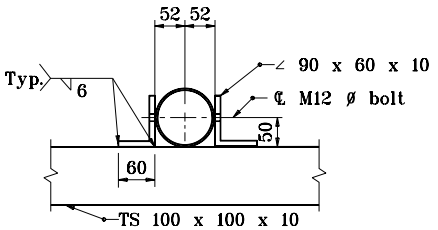

SECTION L–L

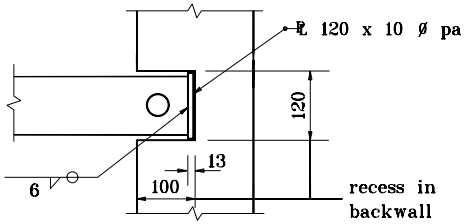

PLAN

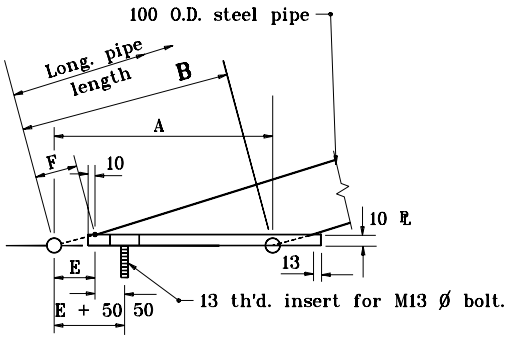

DETAIL A

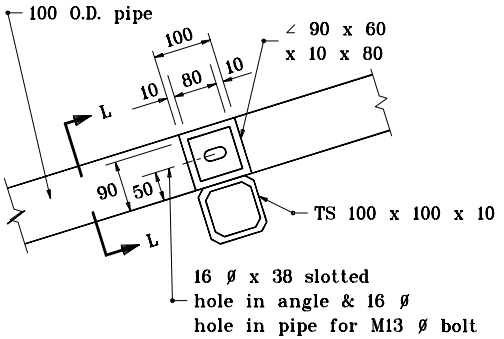

DETAIL B

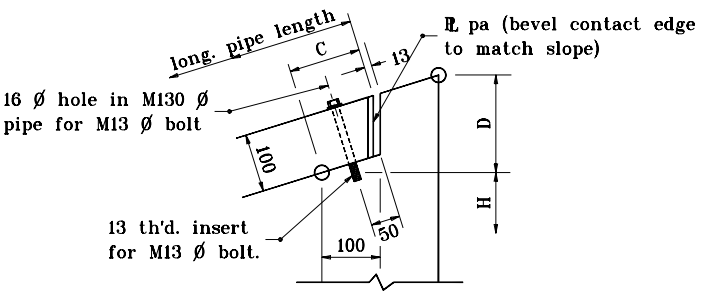

DETAIL C

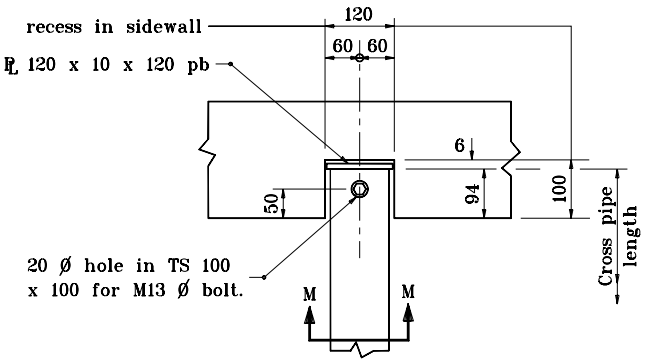

DETAIL D

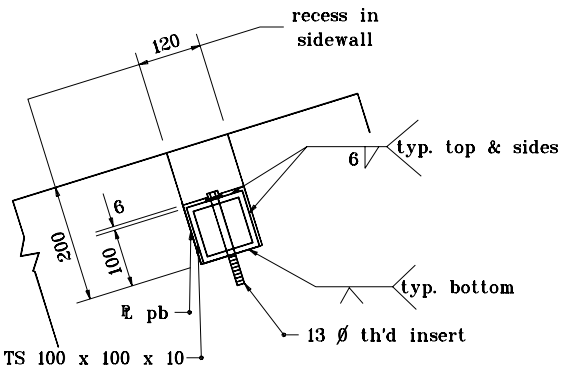

SECTION M–M

All dimensions are in mm unless otherwise specified.

INDIANA DEPARTMENT OF TRANSPORTATION

JANUARY 1999

TYPE I

JANUARY 1999

STANDARD DRAWING NO. **715–GBTO–04**

ANTHONY L. UREMOVICH REGISTERED No. 18095 STATE OF INDIANA PROFESSIONAL ENGINEER

/s/ Anthony L. Uremovich 1-04-99
DESIGN STANDARDS ENGINEER DATE

/s/ Donald W. Lucas 1-04-99
CHIEF HIGHWAY ENGINEER DATE

DESIGN STANDARDS ENGINEER

Source Sheet: GBES 1