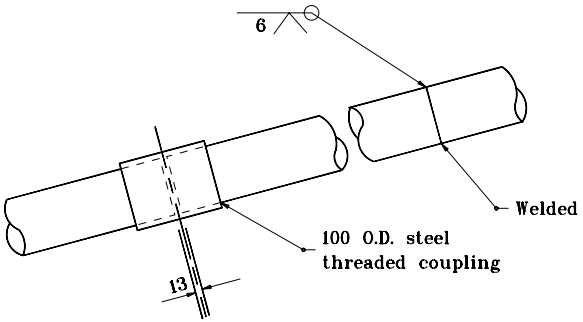

OPTIONAL SHOP SPLICE

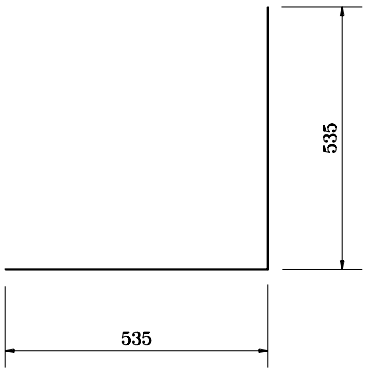

1601 x 1220

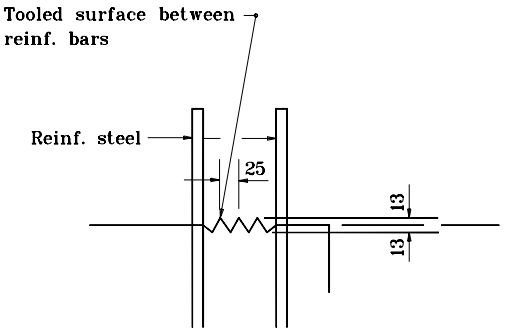

TYPE A CONSTRUCTION JOINT

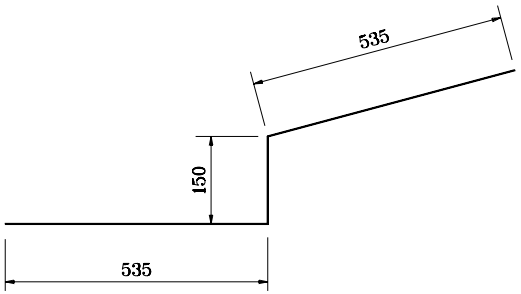

1602 x 1145

All dimensions are in mm unless otherwise specified.

INDIANA DEPARTMENT OF TRANSPORTATION

GRATED BOX END SECTION
TYPE I
JANUARY 1999

STANDARD DRAWING NO. **715-GBTO-02**

ANTHONY L. UREMOVICH REGISTERED No. 18095 STATE OF INDIANA PROFESSIONAL ENGINEER

DESIGN STANDARDS ENGINEER

/s/ Anthony L. Uremovich 1-04-99
DESIGN STANDARDS ENGINEER DATE

/s/ Donald W. Lucas 1-04-99
CHIEF HIGHWAY ENGINEER DATE

Source Sheet: GBES 1