NOTE

1. Refer to Standard Drawing 715-BKFL-09 for general notes.

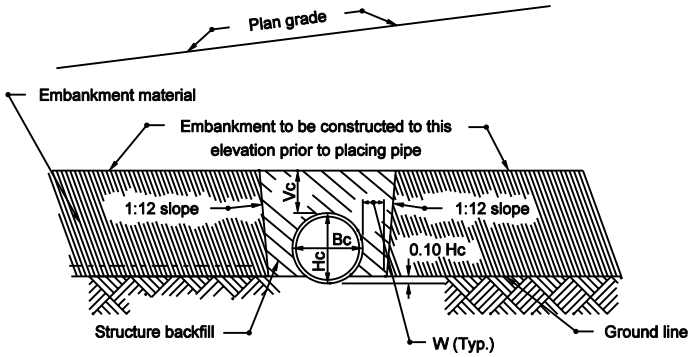

SECTION A-A

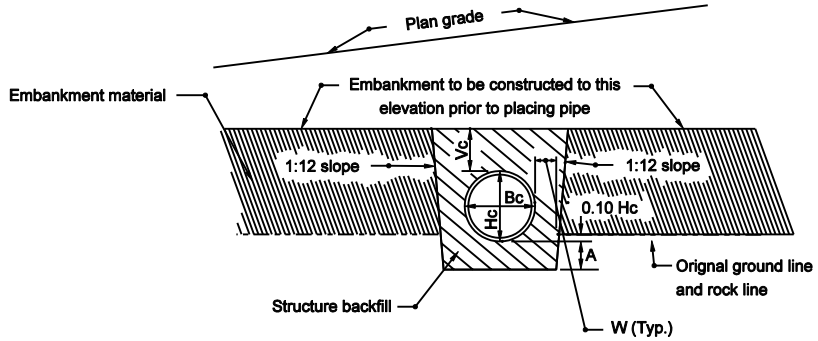

SECTION A-A
ROCK FOUNDATION

LEGEND

Hc = Overall diameter or rise
Bc = Overall diameter or span
A = 200 min. for fill height up to 5.0 m
= 300 min. for fill height of 5.0 m or more
Vc = 300 for Bc ≤ 450
= 500 for Bc > 450
W = 0.3 Bc or 230, whichever is greater
(7) E = Encasement

METHOD 1 BACKFILL

Structures under mainline pavement and public road approaches.

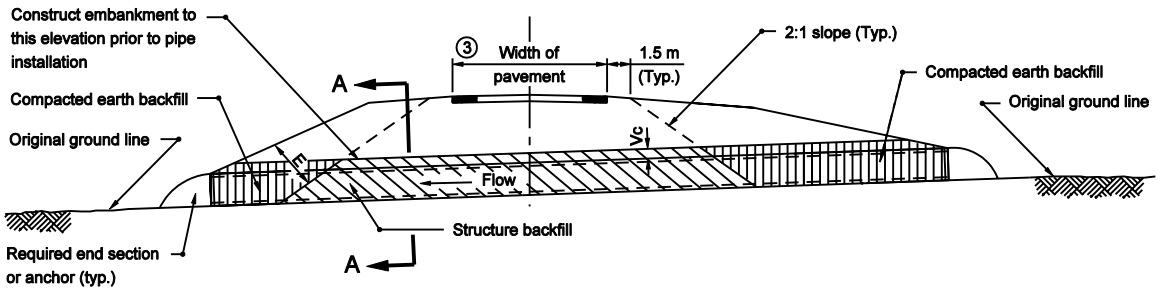

ELEVATION

All Dimension are in mm unless otherwise specfied

INDIANA DEPARTMENT OF TRANSPORTATION

PIPE STRUCTURE BACKFILL EMBANKMENT INSTALLATIONS

MARCH 2003

STANDARD DRAWING NO. 715-BKFL-01

ANTHONY L. UREMOVICH REGISTERED No. 18095 STATE OF INDIANA PROFESSIONAL ENGINEER

DESIGN STANDARDS ENGINEER

/s/ Anthony L. Uremovich 3-03-03
DESIGN STANDARDS ENGINEER DATE

/s/ Richard K. Smutzer 3-03-03
CHIEF HIGHWAY ENGINEER DATE