Top and sides of structure

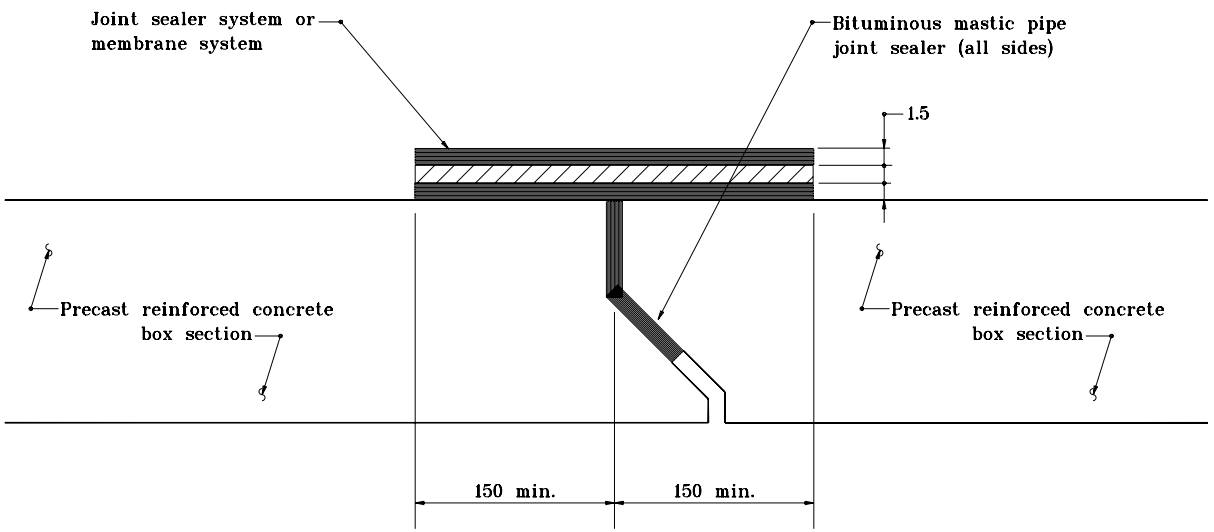

Inside of structure

All dimensions are in mm unless otherwise specified.

INDIANA DEPARTMENT OF TRANSPORTATION

PRECAST REINFORCED CONCRETE BOX SECTION JOINT

MAY 1999

STANDARD DRAWING NO. **714-BCJT-01**

ANTHONY L. UREMOVICH REGISTERED No. 18095 STATE OF INDIANA PROFESSIONAL ENGINEER

DESIGN STANDARDS ENGINEER

/s/ Anthony L. Uremovich 5-03-99
DESIGN STANDARDS ENGINEER DATE

/s/ Donald W. Lucas 5-03-99
CHIEF HIGHWAY ENGINEER DATE

Source Sheet: