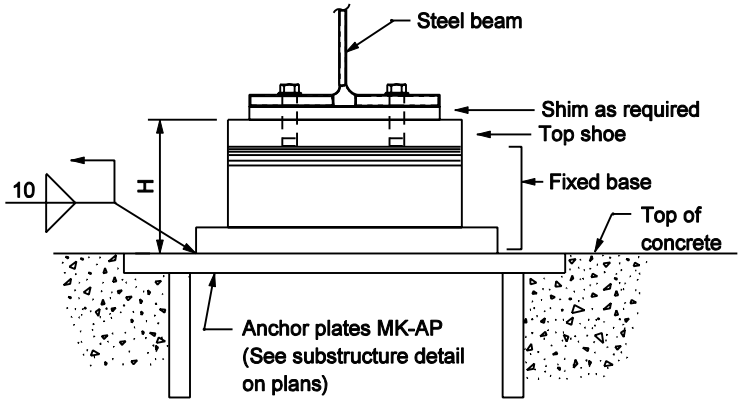

FIXED SHOE ASSEMBLY

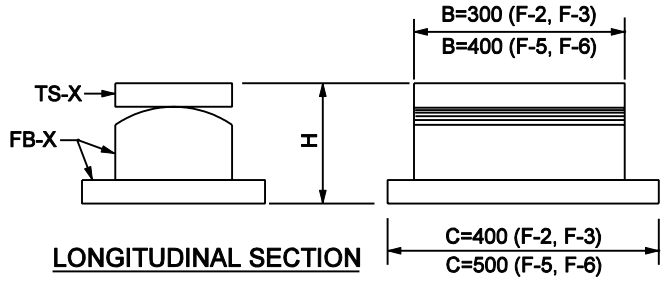

LONGITUDINAL SECTION

Shoe Type	Maximum Reaction	Shoe Assembly TS-X	Shoe Assembly FB-X	H
F-2	1787 kN	TS-2	FB-2	200
F-3	1090 kN	TS-3	FB-3	
F-5	1000 kN	TS-5	FB-5	
F-6	1375 kN	TS-6	FB-6	

NOTES :

1. Curved surfaces of shoes to be machined after weldments have been completed. At the contractor's option the following substitutions of materials will be allowed at no increase in unit price of material:

a). A-709M Grade 345W steel may be used in lieu of A-709M Grade 250 steel.

b). A-709M Grade 690 steel may be used in lieu of A-709M Grade 345W or A-709M Grade 250 steels.

2. Section "pb" to be finished from 100 mm thickness while Section "pc" is to be straightened.

3. Maximum horizontal thrust per Fixed Shoe = 22kN.

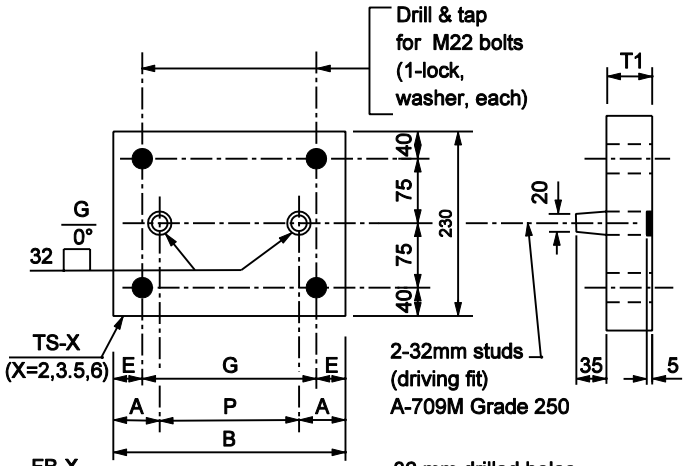

TS-X	T1	E	G	A	P	Section	Material
TS-1 *	45	55	190	55	190	PL 230 x 45	A-709 Grade 250
TS-2	50	55	190	65	180	PL 230 x 50	A-709 Grade 345W
TS-3	50	55	190	70	160	PL 230 x 50	A-709 Grade 690
TS-4 *	45	75	250	75	250	PL 230 x 45	A-709 Grade 250
TS-5	50	75	250	85	240	PL 230 x 50	A-709 Grade 345W
TS-6	50	75	250	95	220	PL 230 x 50	A-709 Grade 690

* Top shoe used with Expansion Steel Shoe only.

TOP SHOE

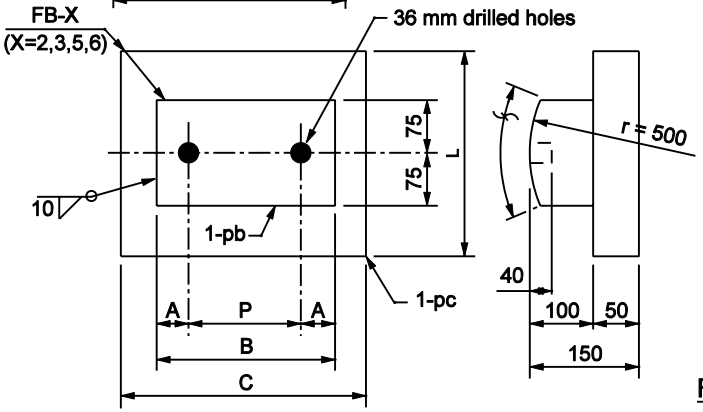

FB-X	C	L	B	A	P	Sections pb	Sections pc
FB-2	400	300	300	60	180	PL 150 x 100	PL 300 x 50
FB-3	400	400	300	70	160	PL 150 x 100	PL 400 x 50
FB-5	500	300	400	80	240	PL 150 x 100	PL 300 x 50
FB-6	500	400	400	90	220	PL 150 x 100	PL 400 x 50

FIXED BASE

All Dimension are in mm unless otherwise specfied

INDIANA DEPARTMENT OF TRANSPORTATION

FIXED STEEL SHOE DETAILS

MARCH 2003

STANDARD DRAWING NO. 711-BSTS-01

RICHARD L. VanCLEAVE REGISTERED No. 9750 STATE OF INDIANA PROFESSIONAL ENGINEER

DESIGN STANDARDS ENGINEER

/s/ Richard L. VanCleave 3-03-03
DESIGN STANDARDS ENGINEER DATE

/s/ Richard Smutzer 3-03-03
CHIEF HIGHWAY ENGINEER DATE