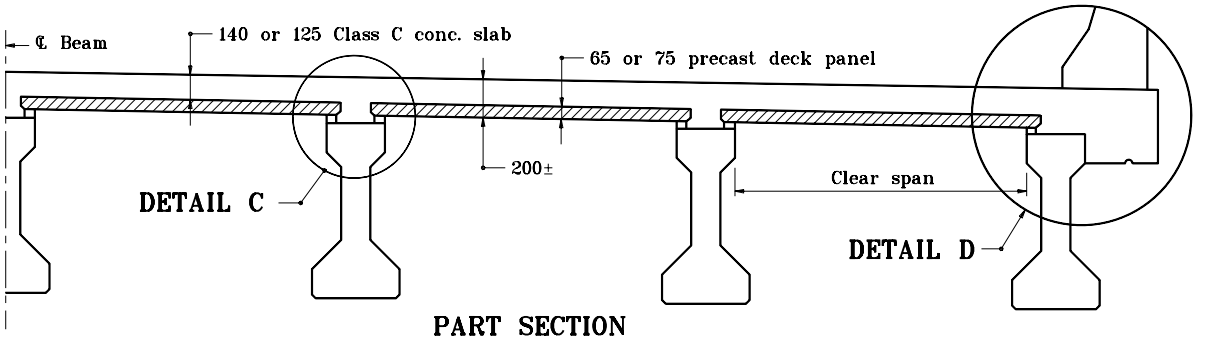

PART SECTION

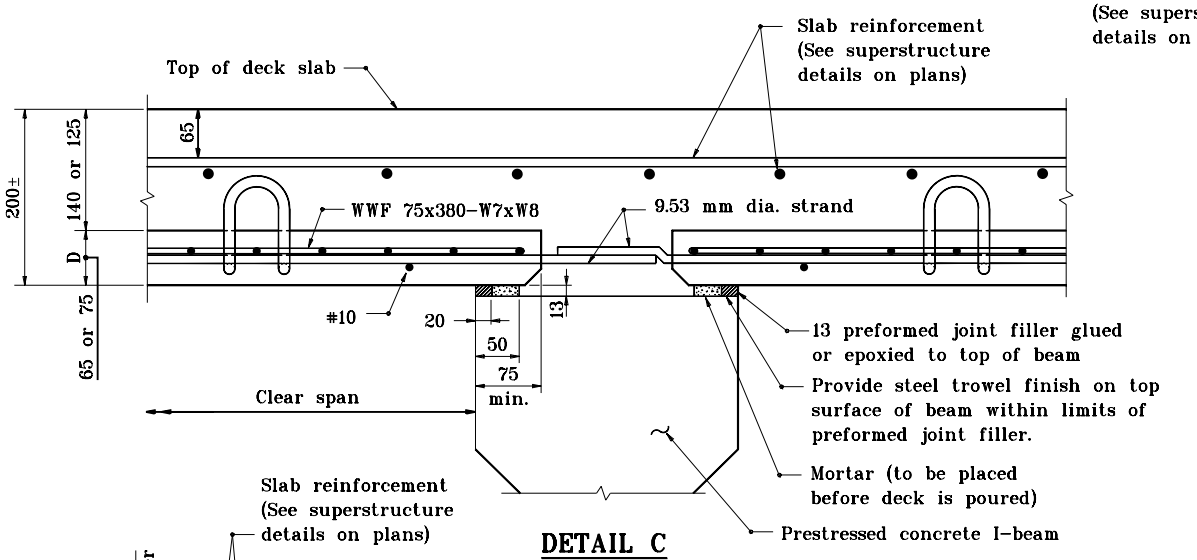

DETAIL C

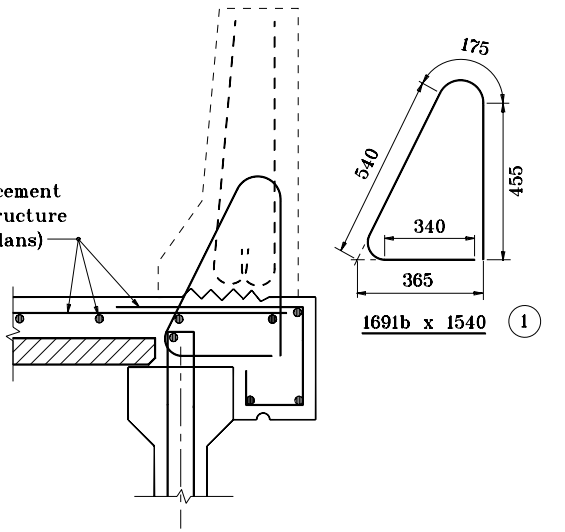

DETAIL D

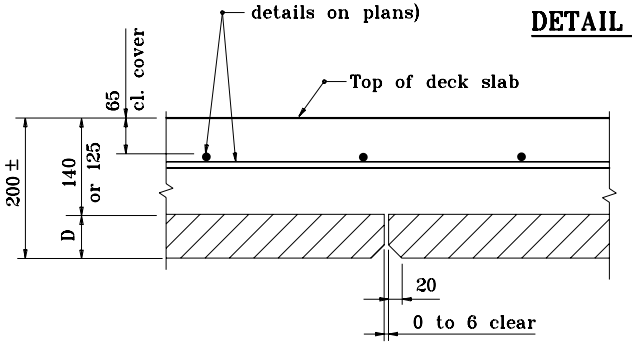

TYPICAL JOINT DETAIL BETWEEN DECK PANELS

NOTES :

1. Use bending bar 1691b instead of 1691a to clear deck panel if required.
2. See Standard Drawing 707-BPDP-01 for Plan and sections and 707-BPDP-02 for General Notes.
3. Details for skewed panels are on the Standard Drawing 707-BPDP-05.

All dimensions are in mm unless otherwise specified.

INDIANA DEPARTMENT OF TRANSPORTATION

PRECAST DECK PANEL DETAILS

MAY 2000

STANDARD DRAWING NO. **707-BPDP-04**

ANTHONY L. UREMOVICH REGISTERED No. 18095 STATE OF INDIANA PROFESSIONAL ENGINEER

DESIGN STANDARDS ENGINEER

/s/ Anthony L. Uremovich 5-01-00
DESIGN STANDARDS ENGINEER DATE

/s/ Firooz Zandi 5-01-00
CHIEF HIGHWAY ENGINEER DATE