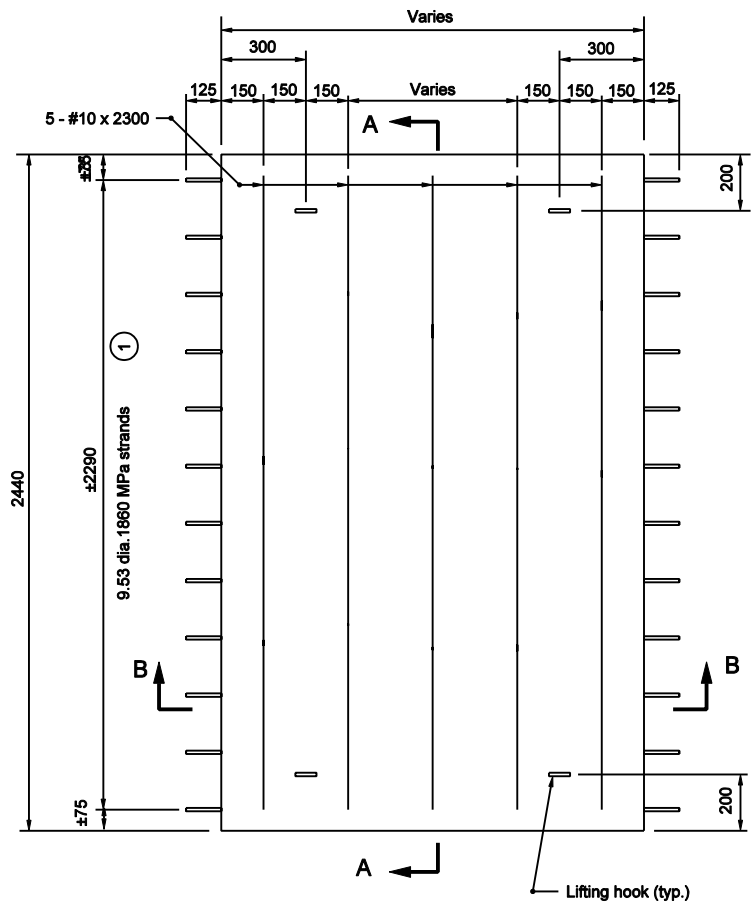

PLAN

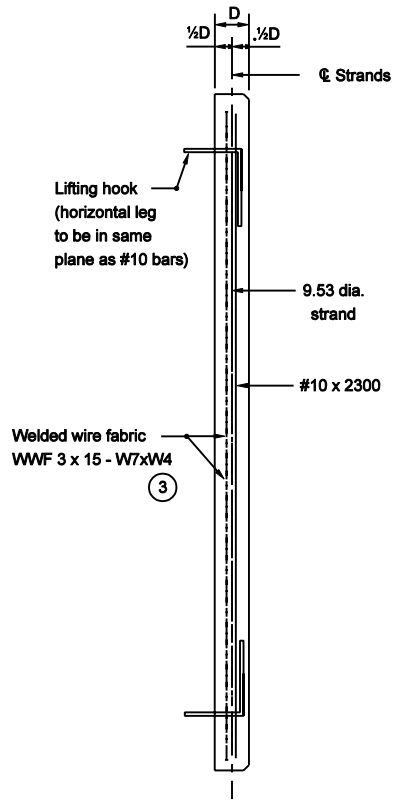

SECTION A-A

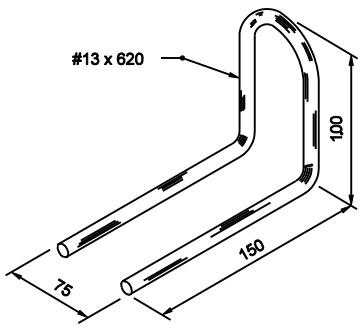

LIFTING HOOK DETAIL

NOTES :

1. See Standard Drawing 707-BPDP-02 for Strand Table and General Notes.
2. See Standard Drawings 707-BPDP-04 and -05 for details.
3. This is an Engiish gauge designation. There is no metric gauge equivalent in the welded wire fabric industry.

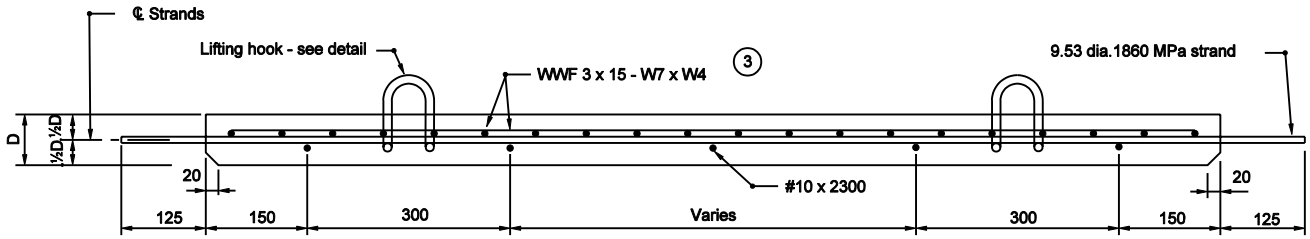

SECTION B-B

All Dimension are in mm unless otherwise specfied

INDIANA DEPARTMENT OF TRANSPORTATION

PRECAST DECK PANEL PLAN AND SECTIONS

SEPTEMBER 2003

STANDARD DRAWING NO. 707-BPDP-01

RICHARD L. VanCLEAVE REGISTERED No. 9750 STATE OF INDIANA PROFESSIONAL ENGINEER

DESIGN STANDARDS ENGINEER

/s/ Richard L. VanCleave 9-02-03
DESIGN STANDARDS ENGINEER DATE

/s/ Richard K. Smutzer 9-02-03
CHIEF HIGHWAY ENGINEER DATE