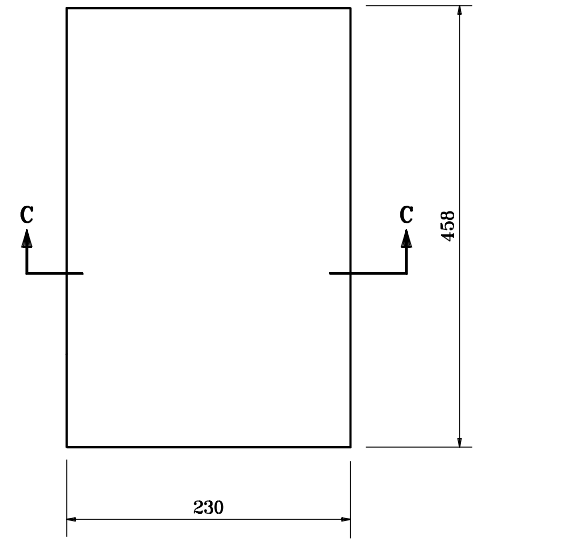

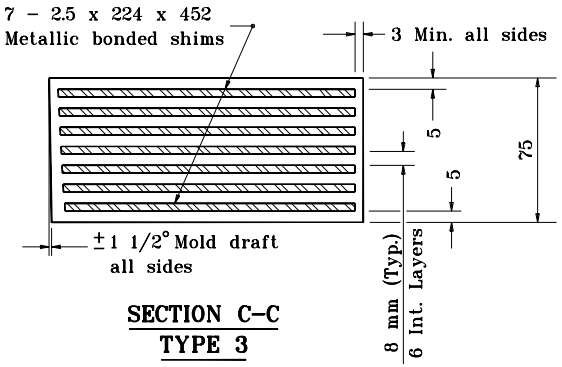

SECTION C–C
TYPE 3

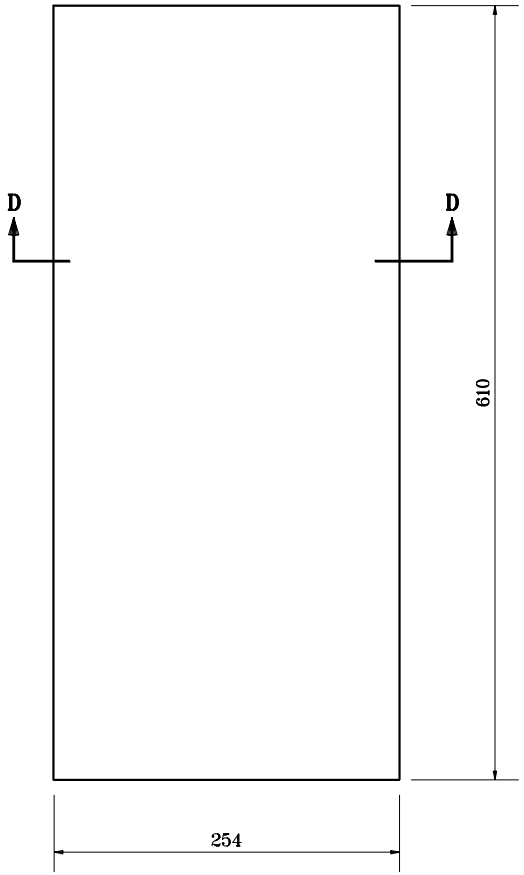

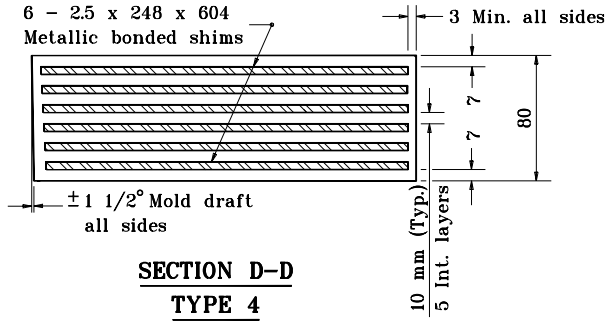

SECTION D–D
TYPE 4

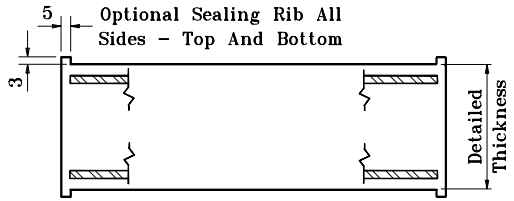

OPTIONAL SEALING RIBS
ALTERNATE SECTIONS C–C AND D–D

GENERAL NOTES

1. Material: 55 (±5) durometer elastomer. Pads Type 3 and 4 will normally be used with prestressed I beams of the same number. For continuous structures and special designs the pad design shall be checked.
2. The proper pad type to be used with spread box beams shall be determined by design.
3. The sealing ribs shown in Alternate Section C–C and D–D are optional for pads Type 3 and 4. If used, the rib shall extend along all sides of the pad both top and bottom.

All dimensions are in mm unless otherwise specified.

INDIANA DEPARTMENT OF TRANSPORTATION

ELASTOMERIC BEARING PADS

JANUARY 1995

STANDARD DRAWING NO. **707–BEBP–02**

ANTHONY L. UREMOVICH REGISTERED No. 18095 STATE OF INDIANA PROFESSIONAL ENGINEER

DESIGN STANDARDS ENGINEER

/s/ Anthony L. Uremovich 1–03–95
DESIGN STANDARDS ENGINEER DATE

/s/ Donald W. Lucas 1–03–95
CHIEF HIGHWAY ENGINEER DATE

Source Sheet: PB–11