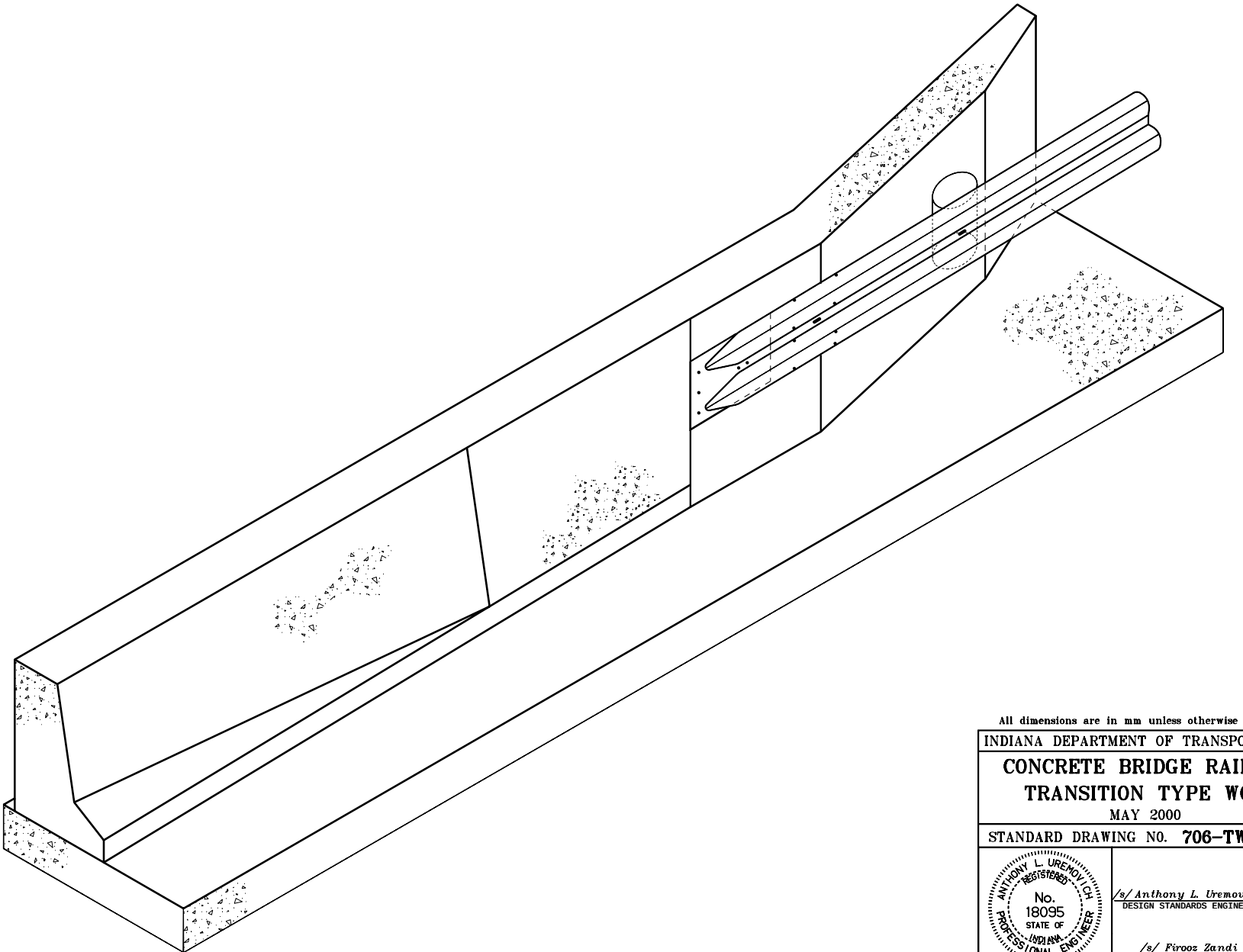

All dimensions are in mm unless otherwise specified.

INDIANA DEPARTMENT OF TRANSPORTATION

CONCRETE BRIDGE RAILING TRANSITION TYPE WGB

MAY 2000

STANDARD DRAWING NO. **706-TWBC-04**

ANTHONY L. UREMOVICH REGISTERED No. 18095 STATE OF INDIANA PROFESSIONAL ENGINEER

DESIGN STANDARDS ENGINEER

/s/ Anthony L. Uremovich 11-15-99
DESIGN STANDARDS ENGINEER DATE

/s/ Firooz Zandi 11-15-99
CHIEF HIGHWAY ENGINEER DATE