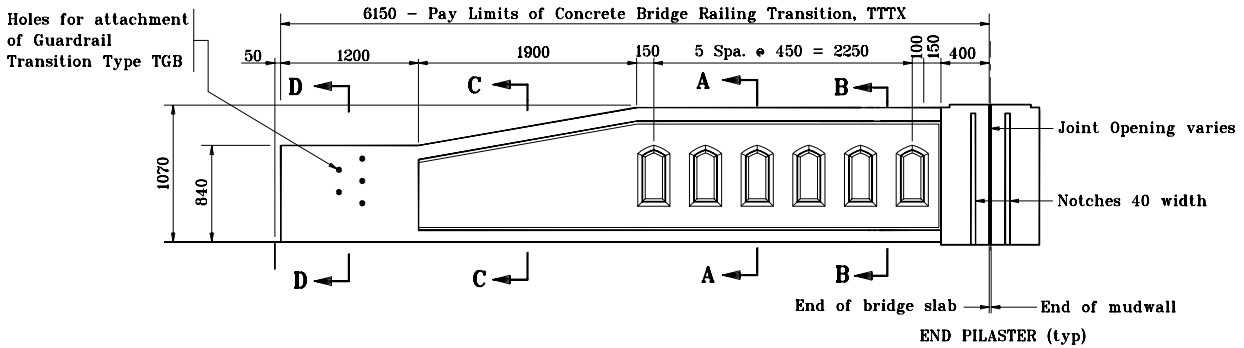


## ELEVATION

NOTES

1. All reinforcing bars designated "E" shall be epoxy coated.
2. See Standard Drawing 706-CBRT-02 for attachment of Guardrail Transition Type TGB.

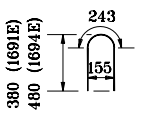


**1691E x 848**
**1694E x 1048**

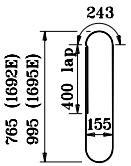


**1692E x 2106**
**1695E x 2566**

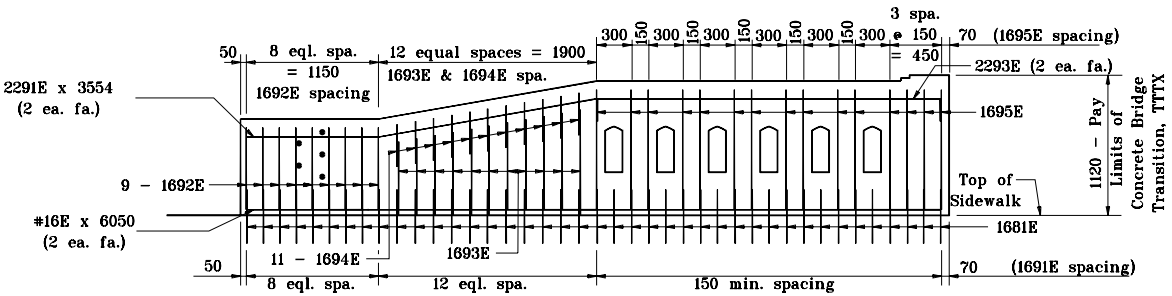


## ELEVATION SHOWING REINFORCING STEEL

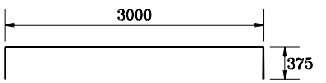


**2293E x 3750**

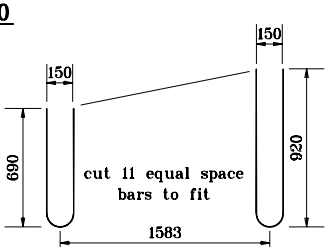


**1693E**

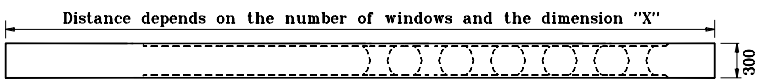


## PLAN

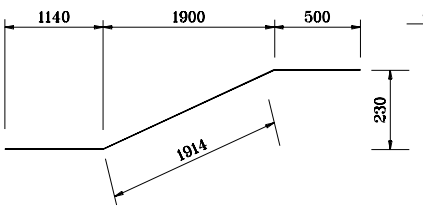


**2291E x 3554**

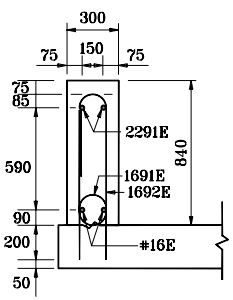


## SECTION D–D

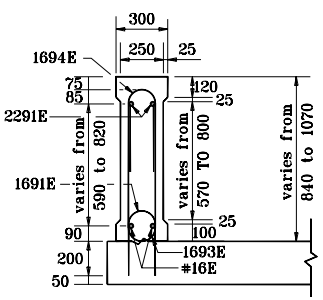


## SECTION C–C

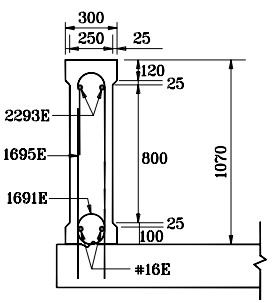


## SECTION B–B

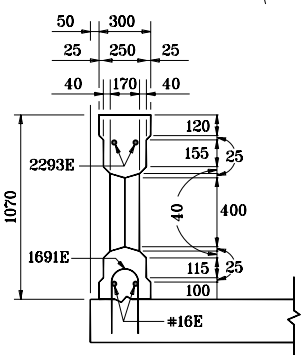


## SECTION A–A

All dimensions are in mm unless otherwise specified.

INDIANA DEPARTMENT OF TRANSPORTATION

# CONCRETE BRIDGE RAILING TRANSITION, TTTX

MAY 2000

STANDARD DRAWING NO. **706-TTTX-01**

ANTHONY L. UREMOVICH REGISTERED No. 18095 STATE OF INDIANA PROFESSIONAL ENGINEER

DESIGN STANDARDS ENGINEER

/s/ Anthony L. Uremovich 5-01-00
DESIGN STANDARDS ENGINEER DATE

/s/ Firooz Zandi 5-01-00
CHIEF HIGHWAY ENGINEER DATE