NOTES

1. See Standard Drawing 706-BRTX-03 for bar bending details.
2. All reinforcing bars designated "E" shall be epoxy coated.

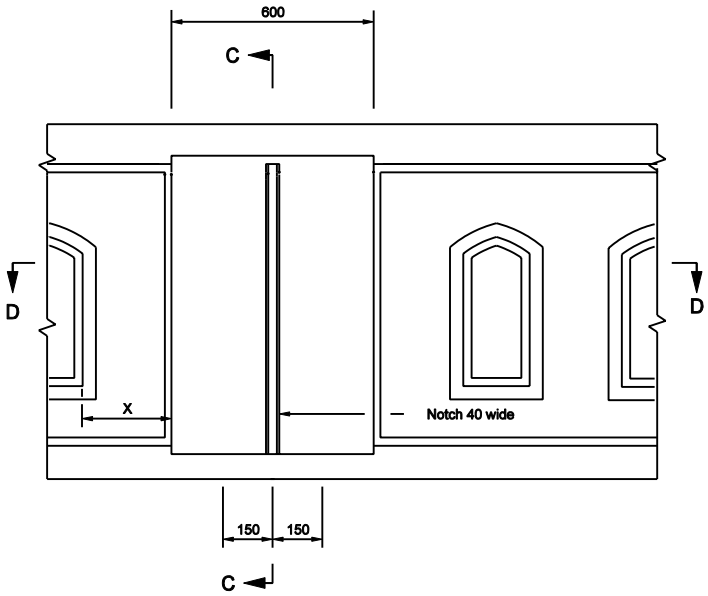

ELEVATION

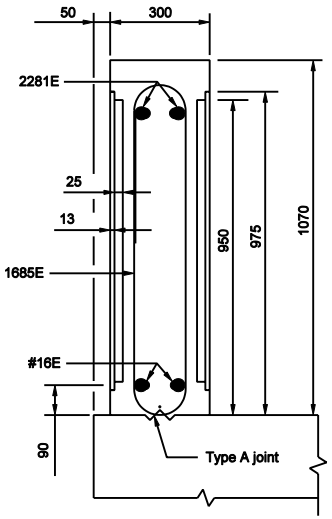

SECTION C-C

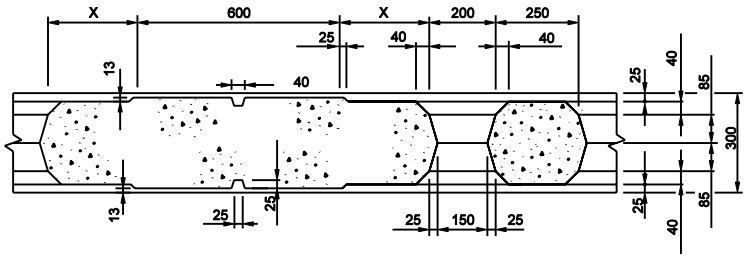

SECTION D-D

All Dimension are in mm unless otherwise specified

INDIANA DEPARTMENT OF TRANSPORTATION

RAILING, TX
(SPAN PILASTER)

SEPTEMBER 2003

STANDARD DRAWING NO. 706-BRTX-02

RICHARD L. VanCLEAVE REGISTERED No. 9750 STATE OF INDIANA PROFESSIONAL ENGINEER

DESIGN STANDARDS ENGINEER

/s/ Richard L. VanCleave 9-02-03
DESIGN STANDARDS ENGINEER DATE

/s/ Richard K. Smutzer 9-02-03
CHIEF HIGHWAY ENGINEER DATE