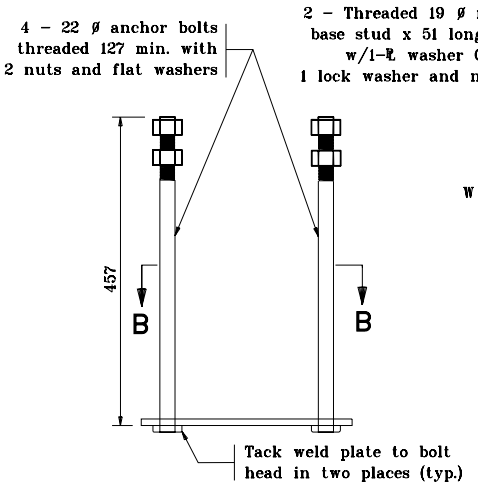

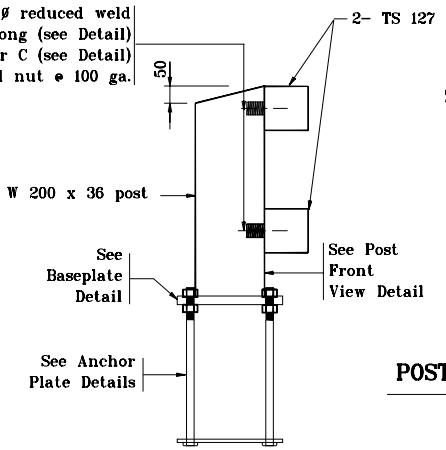

SECTION A – A

Not to Scale

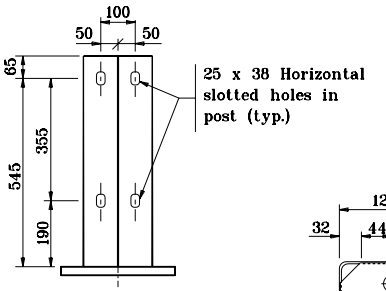

POST FRONT VIEW DETAIL

Not to Scale

NOTES :

(1) Gap of 25 unless noted otherwise on plans. Railing splice required in panel with a deck expansion joint.

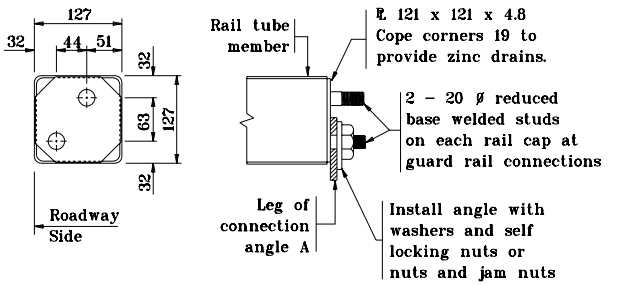

RAILING CAP DETAIL

Not to Scale

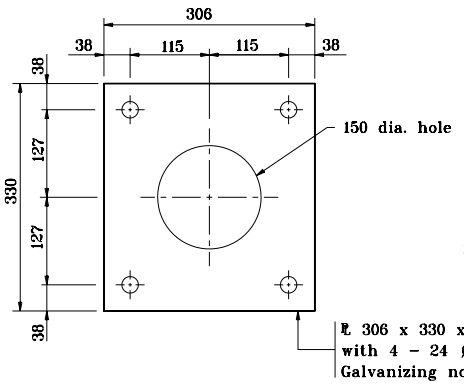

SECTION B – B
ANCHOR PLATE DETAILS

Not to Scale

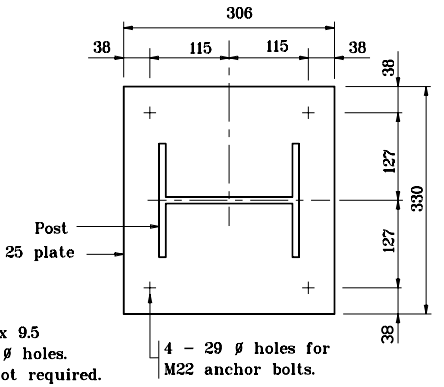

BASE PLATE DETAILS

Not to Scale

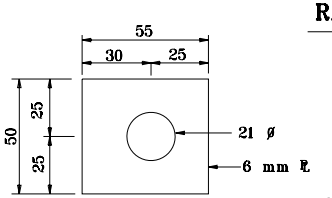

PLATE WASHER C DETAIL

Not to Scale

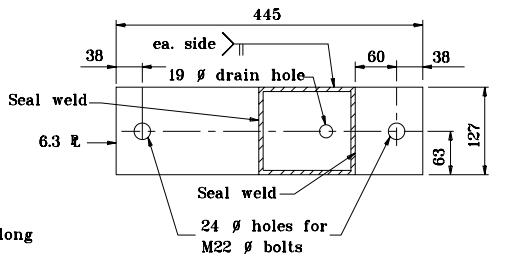

TOP RAILING END VIEW B – B

Not to Scale

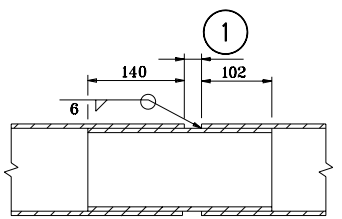

RAILING SPLICE DETAILS

Not to Scale

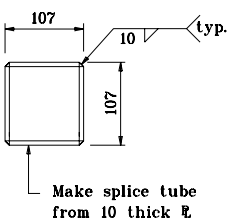

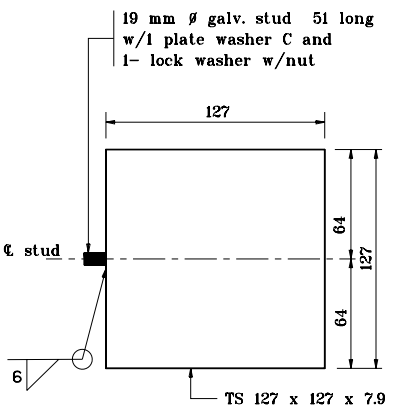

BASE WELD STUD DETAIL

Not to Scale

All dimensions are in mm unless otherwise specified.

INDIANA DEPARTMENT OF TRANSPORTATION

RAILING, CF-1

SEPTEMBER 2001

STANDARD DRAWING NO. **706-BRTM-02**

ANTHONY L. UREMOVICH REGISTERED No. 18095 STATE OF INDIANA PROFESSIONAL ENGINEER

DESIGN STANDARDS ENGINEER

/s/ Anthony L. Uremovich 9-04-01
DESIGN STANDARDS ENGINEER DATE

/s/ Firooz Zandi 9-04-01
CHIEF HIGHWAY ENGINEER DATE