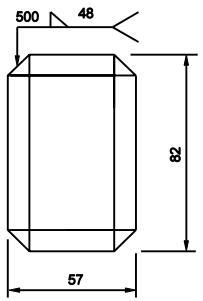

FINISHED DIMENSIONS
OF INNER SLEEVE FOR
TS 102 x 76 x 6.4

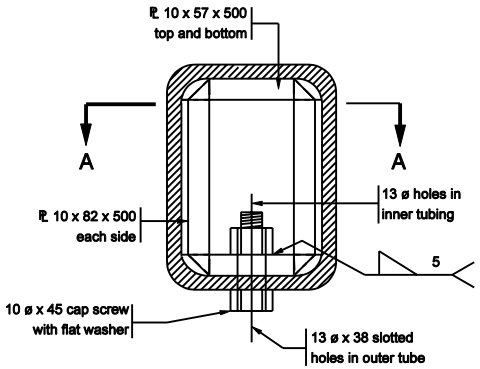

INNER SLEEVE FOR
TS 102 x 76 x 6.4

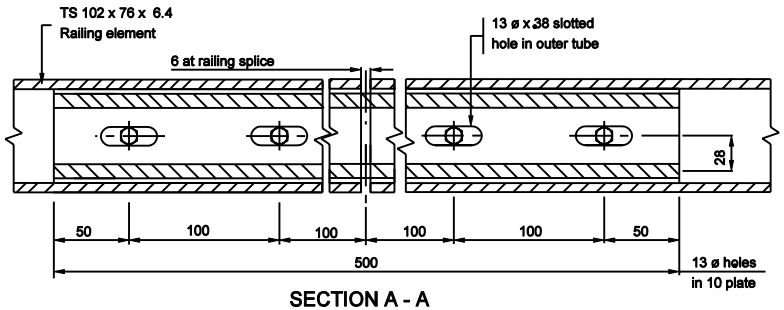

SECTION A - A

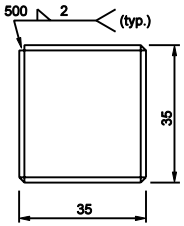

FINISHED DIMENSIONS
OF INNER SLEEVE FOR
TS 51 x 51 x 4.8

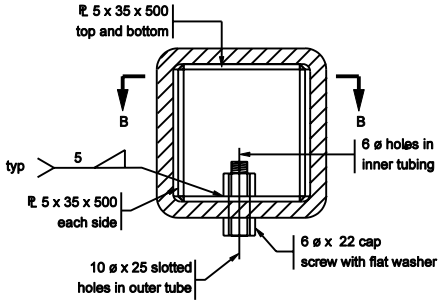

INNER SLEEVE FOR
TS 51 x 51 x 4.8

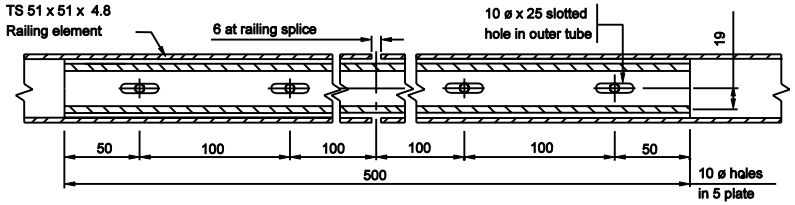

SECTION B - B

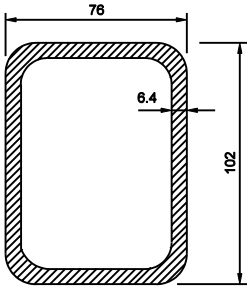

TS 102 x 76 x 6.4

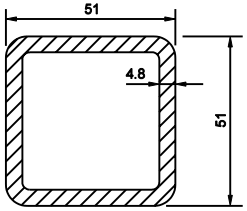

TS 51 x 51 x 4.8

All Dimension are in mm unless otherwise specfied

INDIANA DEPARTMENT OF TRANSPORTATION

RAILING, PF & PS DETAILS

SEPTEMBER 2003

STANDARD DRAWING NO. 706-BRPP-05

RICHARD L. VanCLEAVE
REGISTERED
No. 9750
STATE OF
INDIANA
PROFESSIONAL ENGINEER

DESIGN STANDARDS ENGINEER

/s/ Richard L. VanCleave 9-02-03
DESIGN STANDARDS ENGINEER DATE

/s/ Richard K. Smutzer 9-02-03
CHIEF HIGHWAY ENGINEER DATE