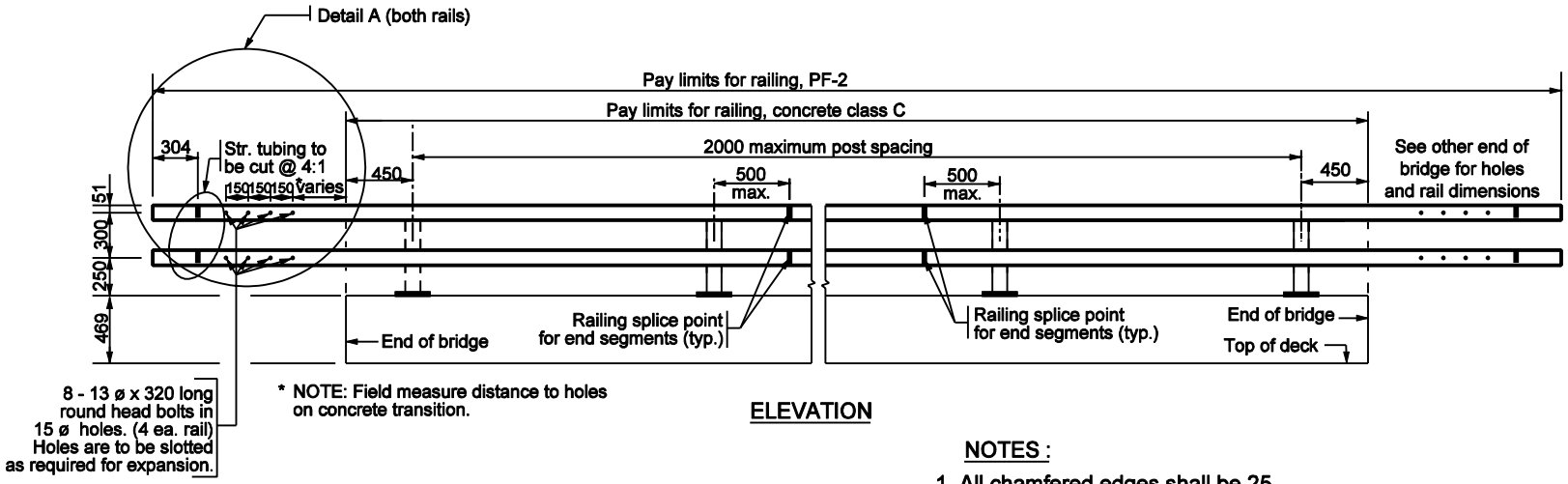

ELEVATION

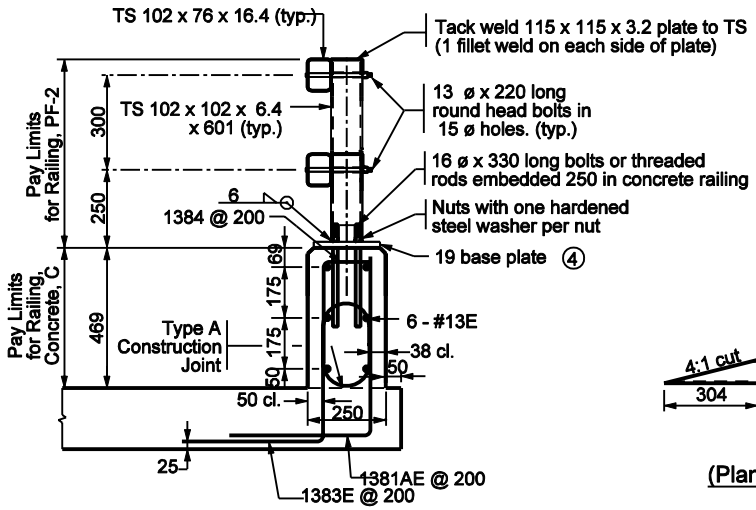

TYPICAL SECTION

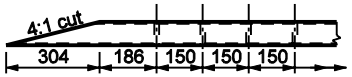

DETAIL A
(Plan view of both rails)

NOTES :

1. All chamfered edges shall be 25.
2. Intermediate railing splices shall be placed every 6 m with center of connection at span quarter points.
3. See Standard Drawing 706-BRPP-05 for Railing Tube Details and Inner Sleeve Details.
4. See Standard Drawing 706-BRPP-06 for Base Plate Detail and reinforcing steel bar bends.
5. See Standard Drawing 706-TTBP-03 and 706-TTBP-04 for Concrete Bridge Railing Transition, TPF-2
6. See Standard Drawing 703-BRST-01 for Standard 180° bar bending detail.
7. All reinforcing bars designated "E" shall be epoxy coated.

All Dimension are in mm unless otherwise specfied

INDIANA DEPARTMENT OF TRANSPORTATION

RAILING, PF-2

SEPTEMBER 2002

STANDARD DRAWING NO. 706-BRPP-02

RICHARD L. VanCLEAVE REGISTERED No. 9750 STATE OF INDIANA PROFESSIONAL ENGINEER

DESIGN STANDARDS ENGINEER

/s/ Richard L. VanCleave 9-03-02
DESIGN STANDARDS ENGINEER DATE

/s/ Richard K. Smutzer 9-03-02
CHIEF HIGHWAY ENGINEER DATE