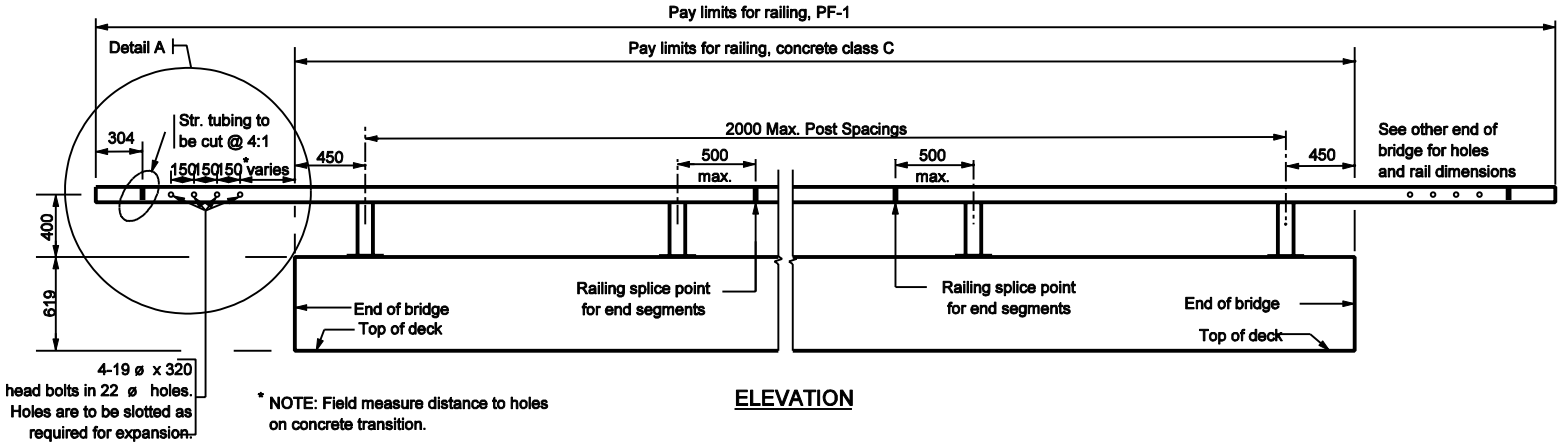

ELEVATION

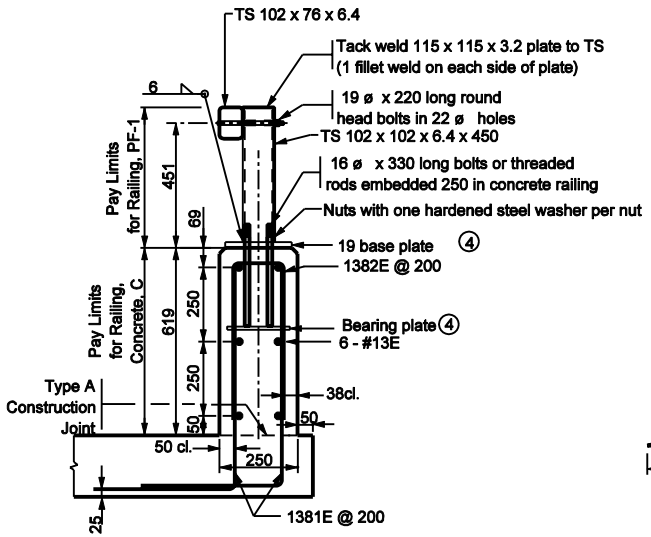

TYPICAL SECTION

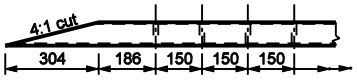

DETAIL A
(Plan View of top rail)

NOTES :

1. All chamfered edges shall be 25.
2. Intermediate railing splices shall be placed every 6 m. with center of connection at span quarter points.
3. See Standard Drawing 706-BRPP-05 for Railing Tube Details and Inner Sleeve Details.
4. See Standard Drawing 706-BRPP-06 for Base Plate Detail, Bearing Plate Detail, and reinforcing steel bar bends.
5. See Standard Drawings 706-TTBP-01 and E 706-TTBP-02 for Concrete Bridge Railing Transition, TPF-1
6. See Standard Drawing 703-BRST-01 for Standard 180°bar bending detail.
7. All reinforcing bars designated "E" shall be epoxy coated.

All Dimension are in mm unless otherwise specfied

INDIANA DEPARTMENT OF TRANSPORTATION

RAILING, PF-1

SEPTEMBER 2002

STANDARD DRAWING NO. 706-BRPP-01

RICHARD L. VanCLEAVE REGISTERED No. 9750 STATE OF INDIANA PROFESSIONAL ENGINEER

DESIGN STANDARDS ENGINEER

/s/ Richard L. VanCleave 9-03-02
DESIGN STANDARDS ENGINEER DATE

/s/ Richard K. Smulzer 9-03-02
CHIEF HIGHWAY ENGINEER DATE