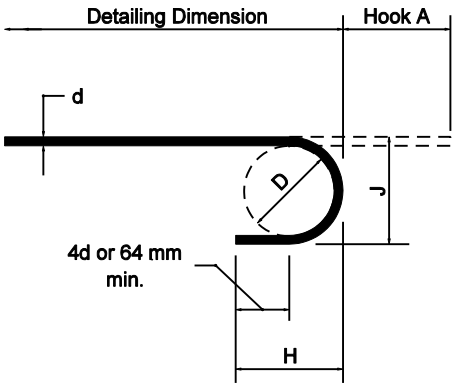

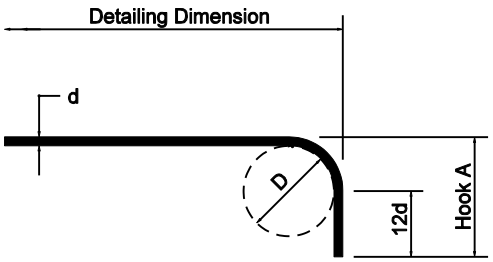

STANDARD HOOKS					
		180* HOOK			90* HOOK
BAR SIZE	D	HOOK A	J	H	HOOK A
#10	60	125	80	105	150
#13	80	150	105	120	200
#16	95	175	130	130	250
#19	115	200	155	155	300
#22	135	250	180	180	375
#25	155	275	205	205	425
#29	240	375	300	265	475
#32	275	425	335	300	550
#36	305	475	375	335	600
#43	465	675	550	450	775
#57	610	925	725	590	1050

REINFORCING BAR NOTES

1. All dimensions on bending diagrams are measured out to out of bars.
2. All dimensions on details are measured on centerlines of bars, except where COVER is indicated.
3. Bent bars are given an alphanumeric bar mark (e.g. 1688). The last two digits (e.g. 88) indicate the mark. The characters preceding the last two digits (e.g. 16) indicate the size of the bar.
4. Straight bars are designated by size and length.
5. Standard size hooks shown on this sheet to be used on all hooked bars unless noted.
6. See bridge plans or structure plans for lap and embedment lengths.

SPLICE BAR NOTES

1. All samples of reinforcing steel shall consist of bars 1500 in length.
2. For straight bars make cut 1500 from end.
3. For bent bars use bars that have straight portion longer than 120 diameters plus 1800 and make cuts 60 diameters plus 6" and 60 diameters plus 1700 from the same bend point or hooked end.
4. Splice bars to lap with bars from which test samples are cut, making laps of 60 diameters at each cut end.

All Dimension are in mm unless otherwise specfied

INDIANA DEPARTMENT OF TRANSPORTATION

BAR BENDING DETAILS

MARCH 2003

STANDARD DRAWING NO. 703-BRST-01

RICHARD L. VanCLEAVE REGISTERED No. 9750 STATE OF INDIANA PROFESSIONAL ENGINEER

DESIGN STANDARDS ENGINEER

/s/ Richard L. VanCleave 3-03-03
DESIGN STANDARDS ENGINEER DATE

/s/ Richard K. Smutzer 3-03-03
CHIEF HIGHWAY ENGINEER DATE