## PROCEDURE FOR SPLICING PARTIALLY DRIVEN PILING

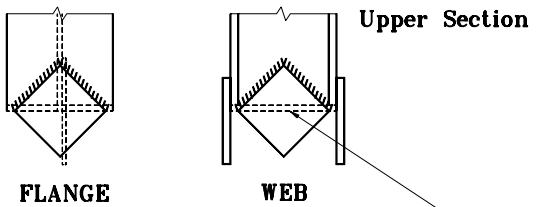


Prepare inside of both flanges one side of web, and weld on splice plates.

a.) Hold upper section in place with pile line, then plumb pile.

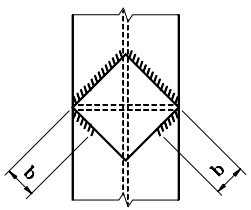


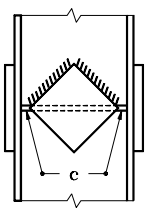


b.) Weld fillet for 50 on each outside corner of flange plates.

c.) Weld prepared butt joint for 40 at each end of the web.

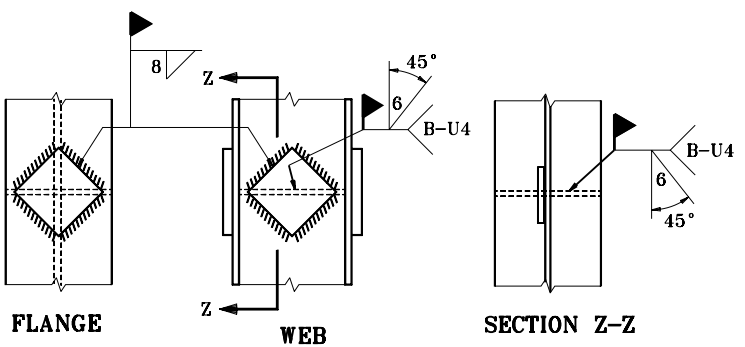


COMPLETED SPLICE

d.) Remove pile line and complete all welds.

## NOTE :

### PROCEDURE FOR SPLICING PILING BEFORE DRIVING

Steel H piling may be spliced in a horizontal position prior to driving using splice plates and web and flange penetration welds as shown below. The welding sequence need not be followed provided the piling remains straight after welding.

### SPLICE PLATE DIMENSIONS & PLACEMENT

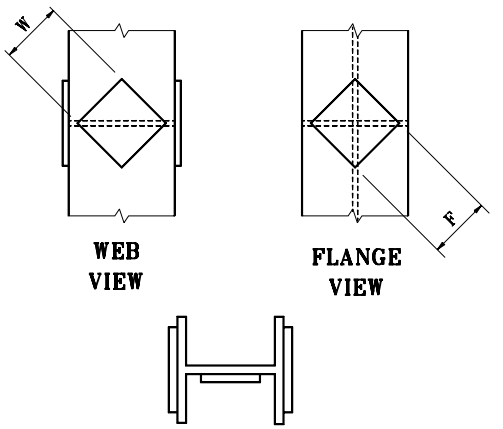


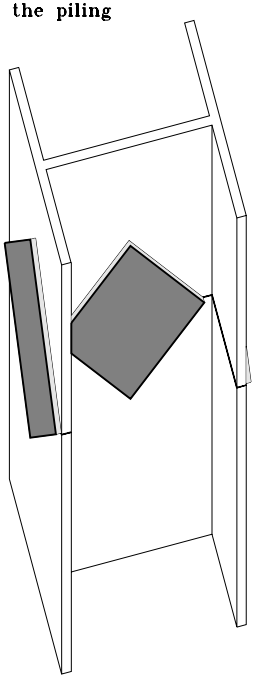

COMPLETED SPLICE ISOMETRIC

Use 10 mm thick square plates & 8 mm fillet welds

| H–PILE SIZE | HP 250 | HP 310 | HP 360 |
|---|---|---|---|
| FLANGE | 180 | 210 | 260 |
| WEB | 140 | 170 | 200 |

All dimensions are in mm unless otherwise specified.

INDIANA DEPARTMENT OF TRANSPORTATION

**STEEL H–PILE SPLICE PROCEDURE**

MAY 1998

STANDARD DRAWING NO. **701–BPIL–05**

ANTHONY L. UREMOVICH REGISTERED No. 18095 STATE OF INDIANA PROFESSIONAL ENGINEER

/s/ Anthony L. Uremovich 5–01–98
DESIGN STANDARDS ENGINEER DATE

/s/ Donald W. Lucas 5–01–98
CHIEF HIGHWAY ENGINEER DATE

DESIGN STANDARDS ENGINEER

Source Sheet: C–1