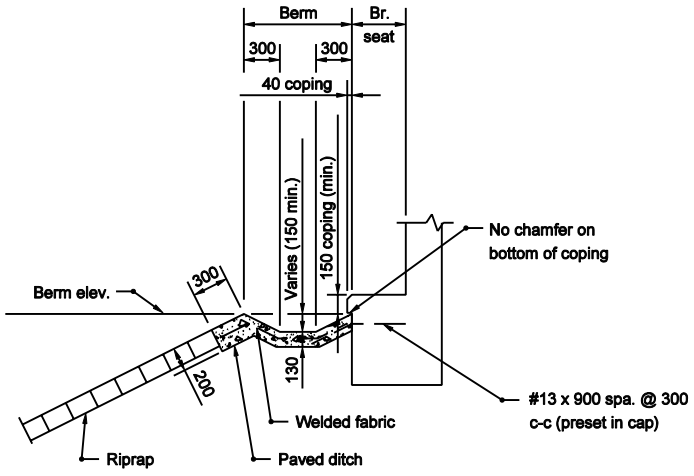

SECTION D-D

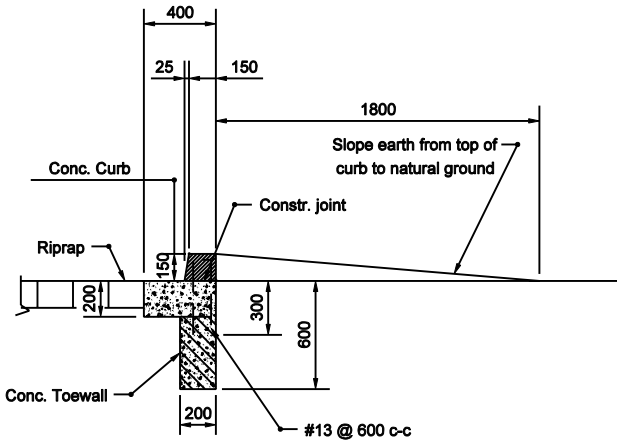

SECTION F-F

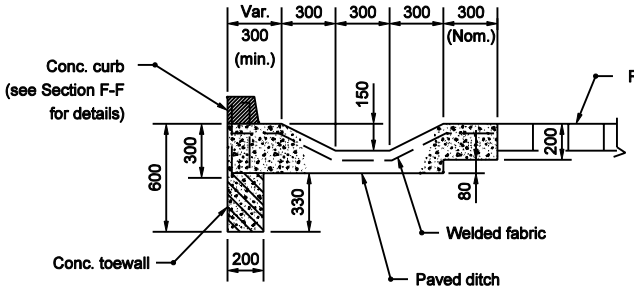

SECTION E-E

Where riprap terminates 600 outside of coping line

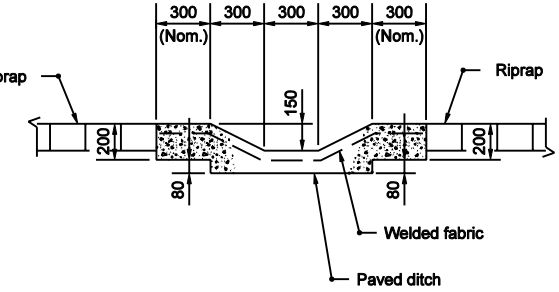

SECTION E-E

Where riprap terminates more than 600 outside of coping line

All Dimension are in mm unless otherwise specfied

INDIANA DEPARTMENT OF TRANSPORTATION

RIPRAP SLOPEWALL DETAILS

SEPTEMBER 2003

STANDARD DRAWING NO. 616-SWRR-01

RICHARD L. VanCLEAVE REGISTERED No. 9750 STATE OF INDIANA PROFESSIONAL ENGINEER

DESIGN STANDARDS ENGINEER

/s/ Richard L. VanCleave 9-02-03
DESIGN STANDARDS ENGINEER DATE

/s/ Richard K. Smutzer 9-02-03
CHIEF HIGHWAY ENGINEER DATE