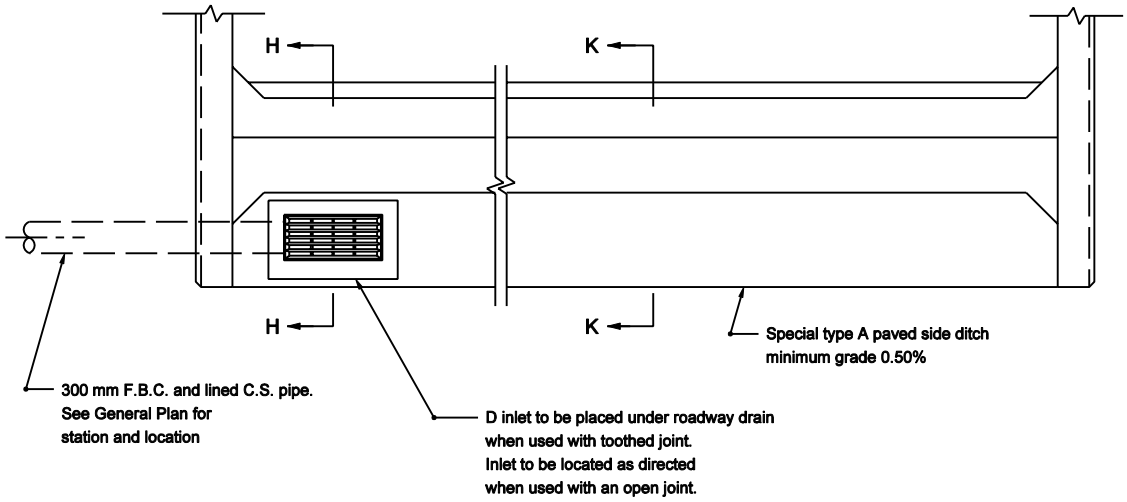


PLAN
(to be used on structures with berms)

## NOTES

1. Precast concrete riprap may be used as an alternate to concrete slopewall only on those structures having berms adjacent to caps.

(2) For additional details of type D inlet, see Standard Drawing 720-INST-03.

(3) For appropriate casting, see Standard Drawing 720-CDSC-01.

4. Welded fabric shall be placed within the middle third of slopewall thickness and shall extend through all construction joints.

(5) WWF 6" x 6", W3 x W3 at 42 lb/100 sq. ft., or equivalent; or standard pavement fabric reinforcing of 42 lb/100 sq. ft minimum. This is an English gauge designation. There is no metric guage equivalent in the welded wire fabric industry. Wire furnished in flat sheets unless otherwise specified.

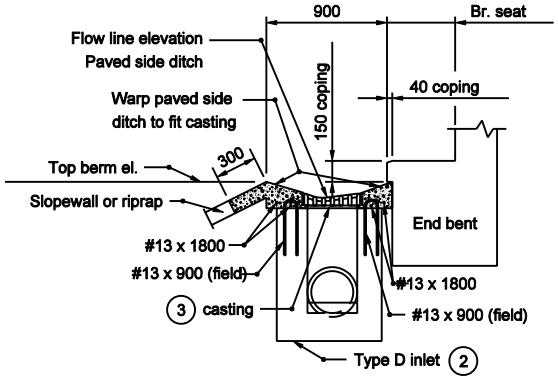


SECTION H-H

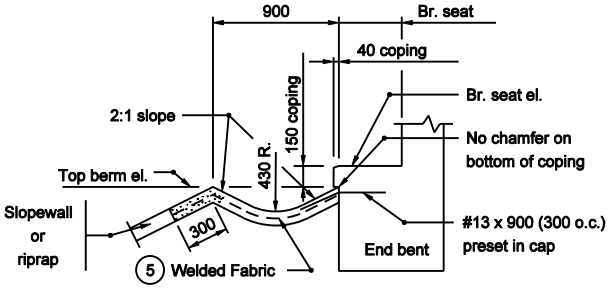


SECTION K-K

All Dimension are in mm unless otherwise specfied

INDIANA DEPARTMENT OF TRANSPORTATION

# SLOPEWALL AND DRAINAGE DETAILS

SEPTEMBER 2003

STANDARD DRAWING NO. 616-SWCO-07

RICHARD L. VanCLEAVE REGISTERED No. 9750 STATE OF INDIANA PROFESSIONAL ENGINEER

DESIGN STANDARDS ENGINEER

/s/ Richard L. VanCleave 9-02-03
DESIGN STANDARDS ENGINEER DATE

/s/ Richard K. Smutzer 9-02-03
CHIEF HIGHWAY ENGINEER DATE