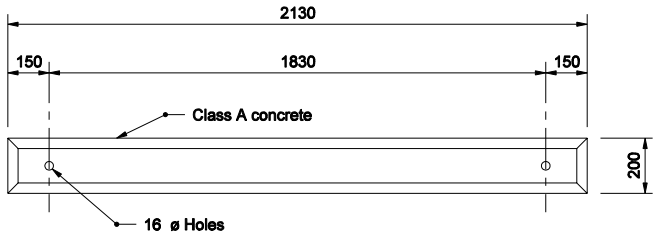

TOP VIEW

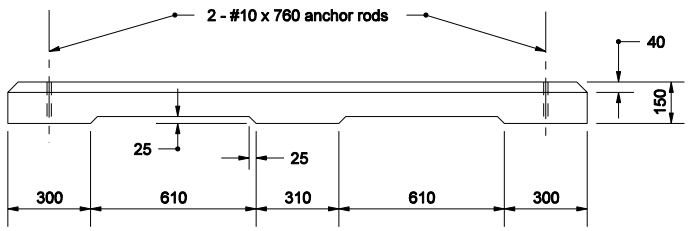

SIDE VIEW

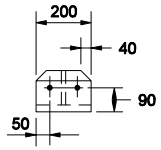

END VIEW

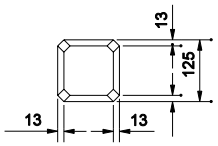

TOP VIEW

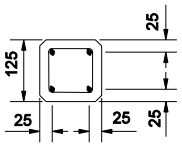

SECTION A-A

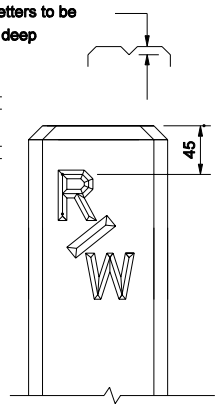

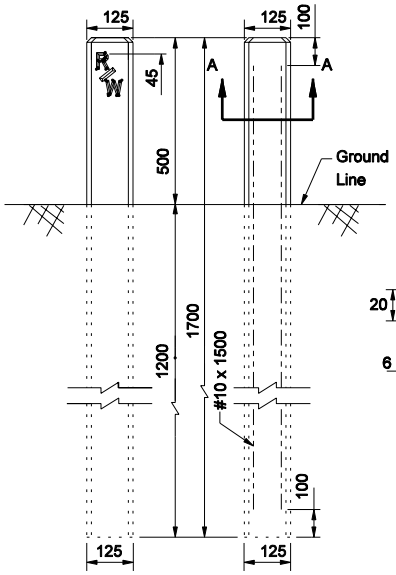

ELEVATION

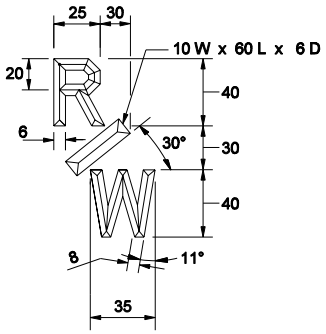

All Dimension are in mm unless otherwise specfied

INDIANA DEPARTMENT OF TRANSPORTATION

RIGHT-OF-WAY MARKER AND CONCRETE PARKING BARRIER

MARCH 2004

STANDARD DRAWING NO. 615-RWPB-01

RICHARD L. VanCLEAVE REGISTERED No. 9750 STATE OF INDIANA PROFESSIONAL ENGINEER

DESIGN STANDARDS ENGINEER

/s/ Richard L. VanCleave X-OX-OX
DESIGN STANDARDS ENGINEER DATE

/s/ Richard K. Smutzer X-OX-OX
CHIEF HIGHWAY ENGINEER DATE