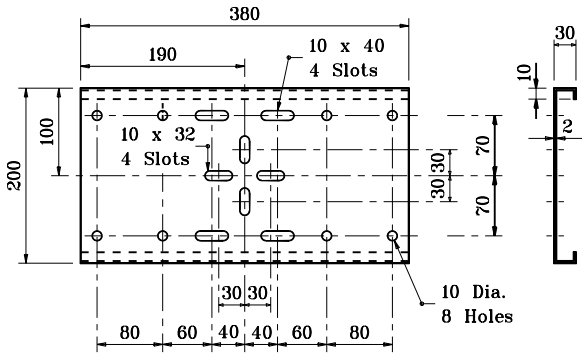

SHELF

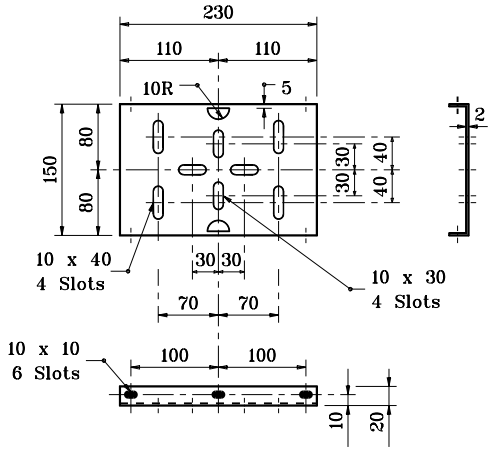

PLATFORM

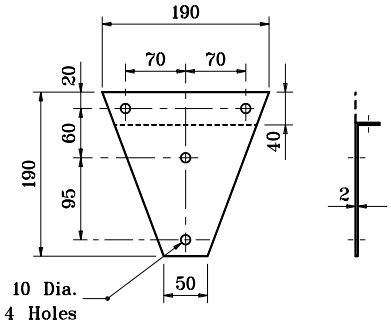

BRACKET

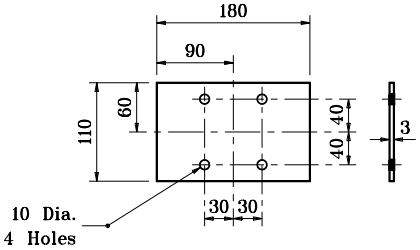

ANTI-TWIST PLATE

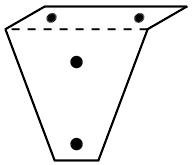

FINISHED BRACKET ISOMETRIC

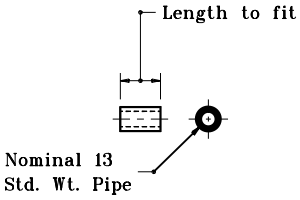

SPACER

All dimensions are in mm unless otherwise specified.

INDIANA DEPARTMENT OF TRANSPORTATION

MAILBOX SUPPORT HARDWARE

APRIL 1995

STANDARD DRAWING NO. **611-MBAS-03**

ANTHONY L. UREMOVICH REGISTERED No. 18095 STATE OF INDIANA PROFESSIONAL ENGINEER

DESIGN STANDARDS ENGINEER

/s/ Anthony L. Uremovich 4-03-95
DESIGN STANDARDS ENGINEER DATE

/s/ Donald W. Lucas 4-03-95
CHIEF HIGHWAY ENGINEER DATE

Source Sheet: MH3