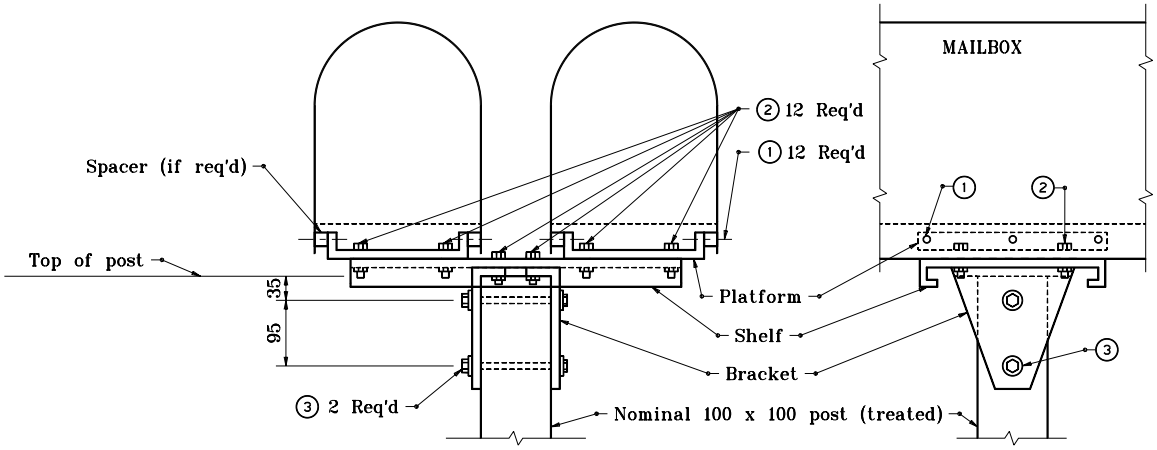

WITH WOOD POST

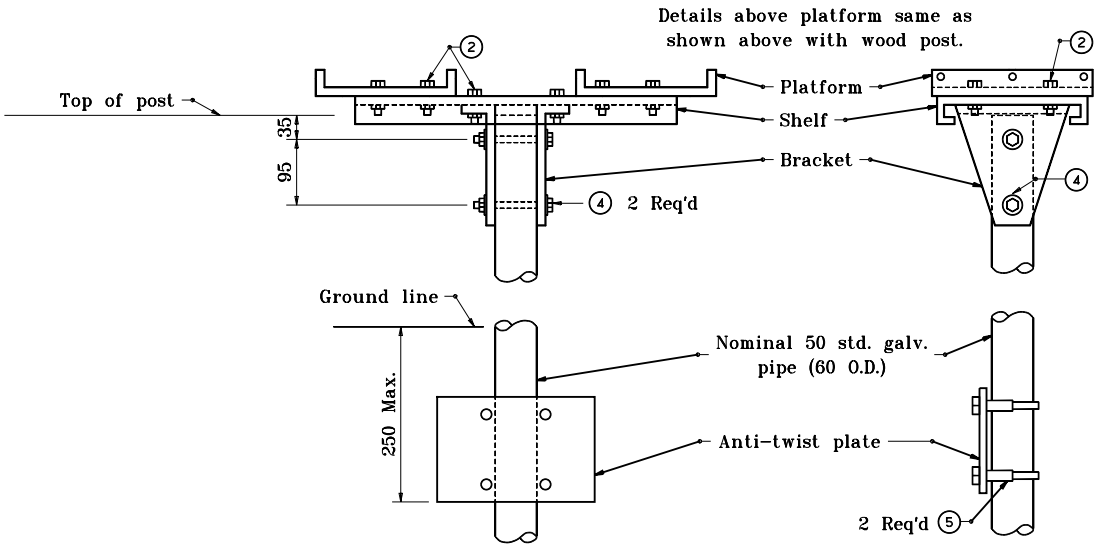

WITH PIPE POST

LEGEND

① M4 x "L" truss head machine screw with 2 M4 flat washers, M4 lock washer, and M4 hex nut.

② M10 x 20 hex cap screw with 2 M10 flat washers, M10 lock washers, and M10 hex nut.

③ M10 x 120 hex cap screw with 2 M10 flat washers, M10 lock washers, and M10 hex nut.

④ M10 x 80 hex cap screw with 2 M10 flat washers, M10 lock washers, M10 lock washer, and M10 hex nut.

⑤ Nominal 60 muffler clamp

All dimensions are in mm unless otherwise specified.

INDIANA DEPARTMENT OF TRANSPORTATION

DOUBLE MAILBOX ASSEMBLY

APRIL 1995

STANDARD DRAWING NO. **611-MBAS-02**

ANTHONY L. UREMOVICH REGISTERED No. 18095 STATE OF INDIANA PROFESSIONAL ENGINEER

DESIGN STANDARDS ENGINEER

/s/ Anthony L. Uremovich 8-08-06
DESIGN STANDARDS ENGINEER — DATE

/s/ Donald W. Lucas 8-08-06
CHIEF HIGHWAY ENGINEER — DATE

Source Sheet: MH3