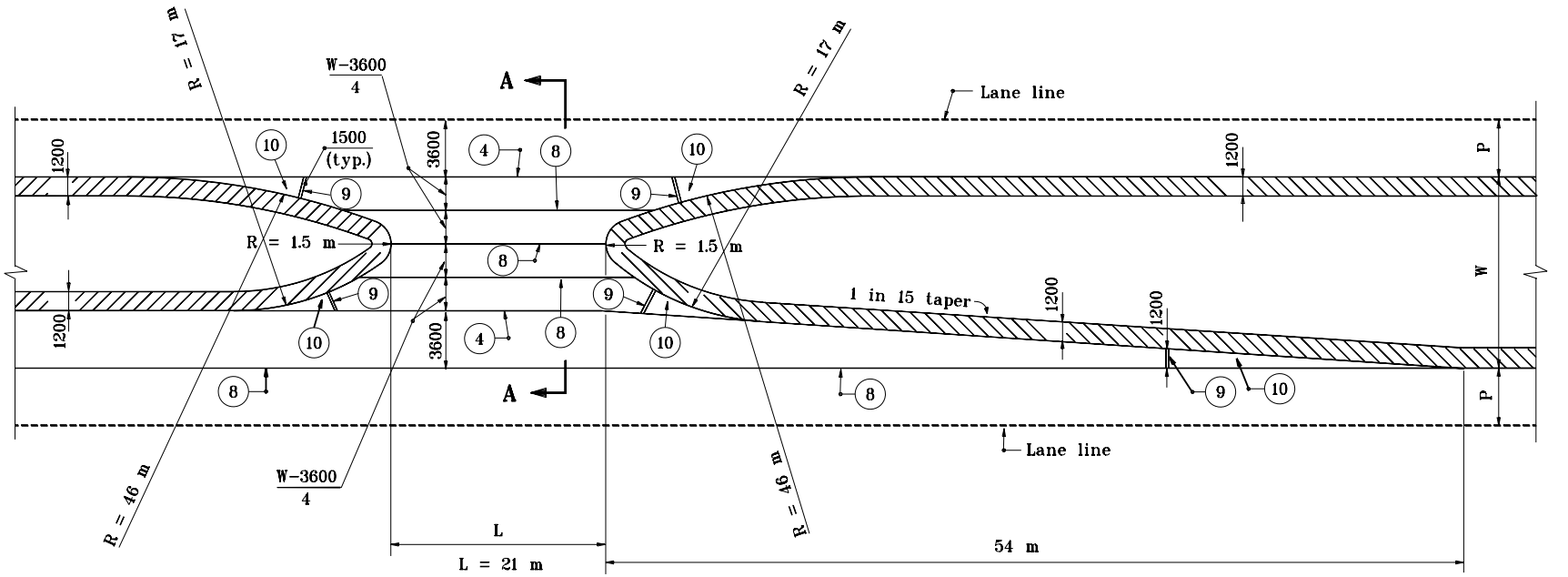

L = 21 m

Type P $\boxed{9\ m \leq W < 11\ m}$

L = 20 m

Type R $\boxed{11\ m \leq W < 14\ m}$

PLAN

NOTES :

1. See Standard Drawing 610-PRCO-01 for Legend and Section A-A.

All dimensions are in mm unless otherwise specified.

INDIANA DEPARTMENT OF TRANSPORTATION

PUBLIC ROAD CROSSOVERS TYPE P & R

MAY 2000

STANDARD DRAWING NO. **610-PRCO-04**

ANTHONY L. UREMOVICH REGISTERED No. 18095 STATE OF INDIANA PROFESSIONAL ENGINEER

DESIGN STANDARDS ENGINEER

/s/ Anthony L. Uremovich 5-01-00
DESIGN STANDARDS ENGINEER DATE

/s/ Firooz Zandi 5-01-00
CHIEF HIGHWAY ENGINEER DATE