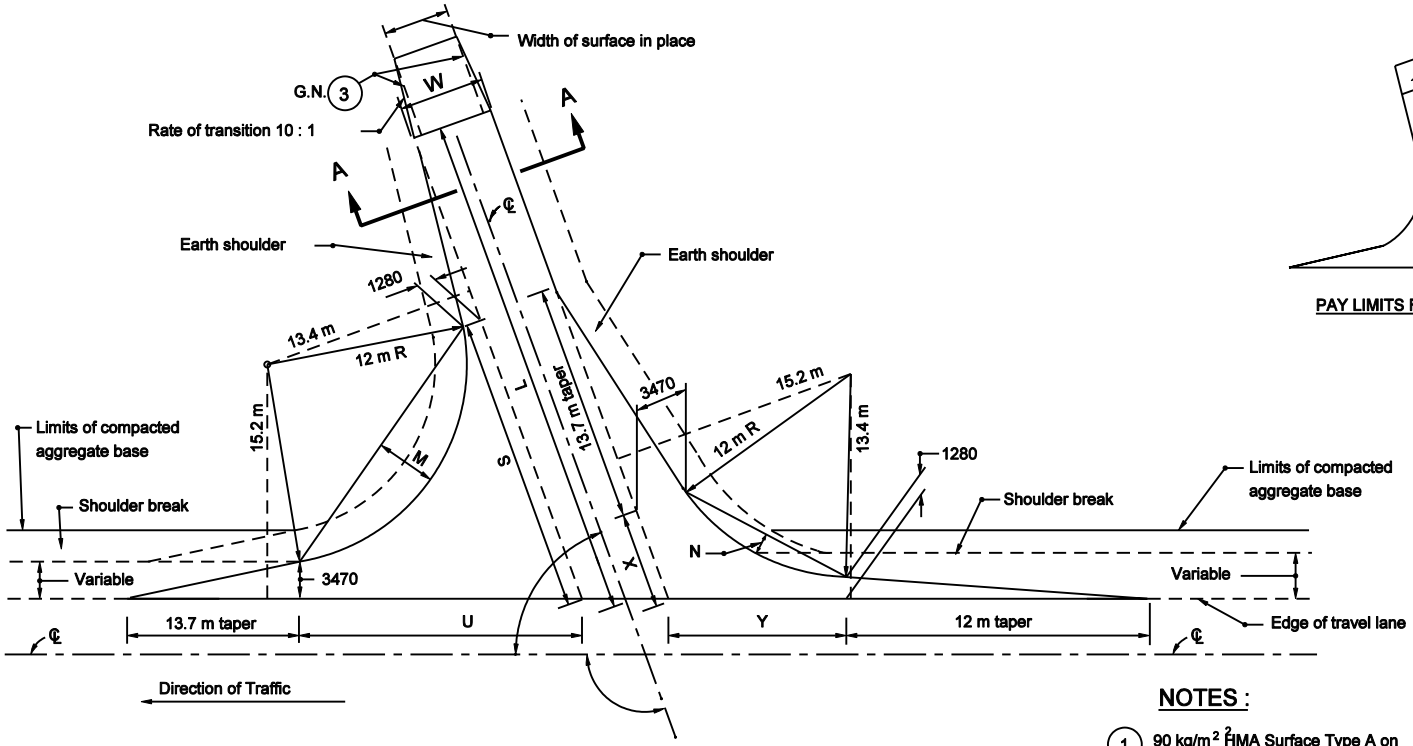

PUBLIC ROAD APPROACH TYPE A

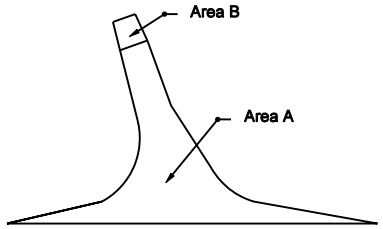

PAY LIMITS FOR HMA FOR APPROACHES

NOTES :

1. 90 kg/m² HMA Surface Type A on 150 kg/m² HMA Intermediate Type A on 200 mm compacted aggregate base #53
2. See General Notes on Standard Drawing 610-PRAP-04.
3. See Table on Standard Drawing 610-PRAP-05 for computed values.
4. G.N. - See General Notes

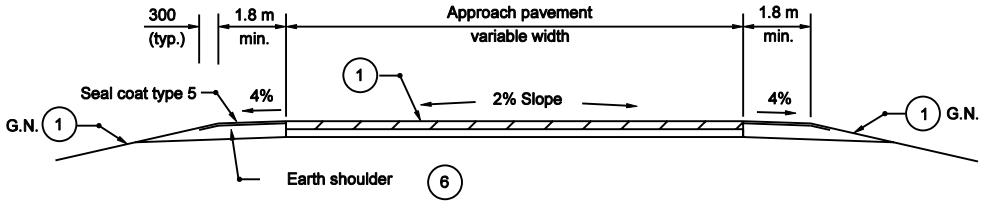

SECTION A-A MINIMUM PAVEMENT SECTION

For ADT ≤ 1000 7

All Dimension are in mm unless otherwise specfied

INDIANA DEPARTMENT OF TRANSPORTATION

PUBLIC ROAD APPROACH TYPE A

MARCH 2003

STANDARD DRAWING NO. 610-PRAP-02

RICHARD L. VanCLEAVE REGISTERED No. 9750 STATE OF INDIANA PROFESSIONAL ENGINEER

DESIGN STANDARDS ENGINEER

/s/ Richard L. VanCleave 3-03-03
DESIGN STANDARDS ENGINEER DATE

/s/ Richard K. Smutzer 3-03-03
CHIEF HIGHWAY ENGINEER DATE