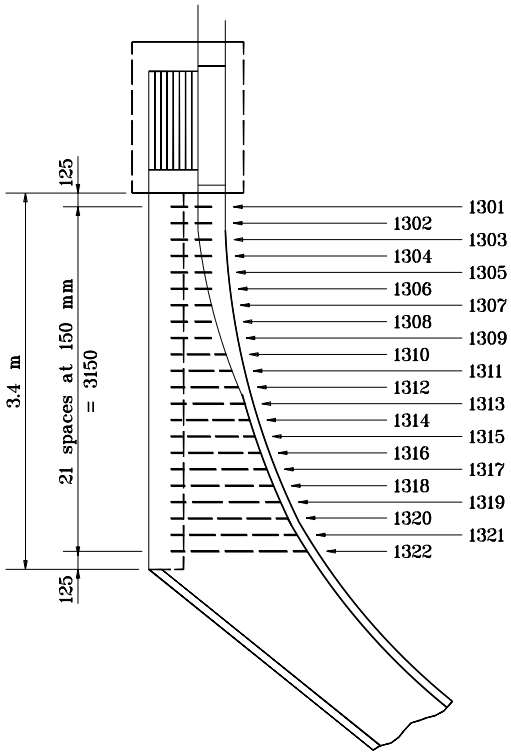

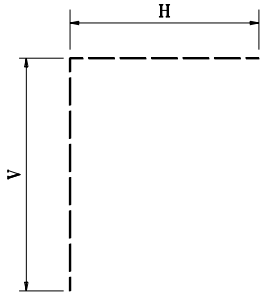

#13 BAR

MK	QTY.	SIZE	BAR LENGTHS		
			V	H	TOTAL
1301	1	#13	600	380	980
1302				400	1000
1303				430	1030
1304				460	1060
1305				480	1080
1306				510	1110
1307				530	1130
1308				560	1160
1309				580	1180
1310				610	1210
1311				660	1260
1312				710	1310
1313				760	1360
1314				810	1410
1315				860	1460
1316				910	1510
1317				1020	1620
1318				1120	1720
1319				1200	1800
1320				1270	1870
1321				1370	1970
1322			600	1470	2070
1323	3	#13	380	920	3900

MK 1323 bars to be threaded, galvanized, and installed as shown in Detail B on Standard Drawing 605-GTRC-01.

REINFORCING PLAN CONCRETE GUTTER TURNOUT

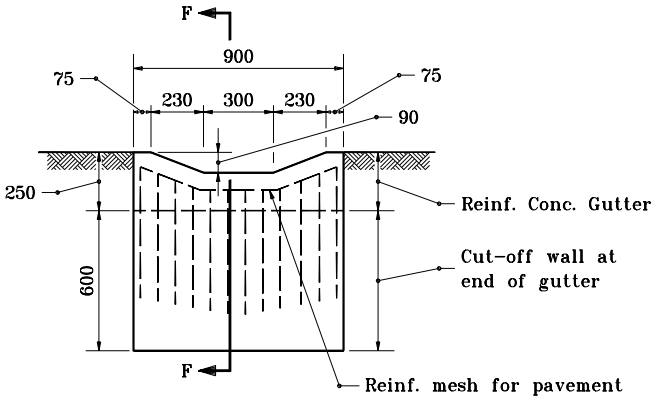

SECTION G-G

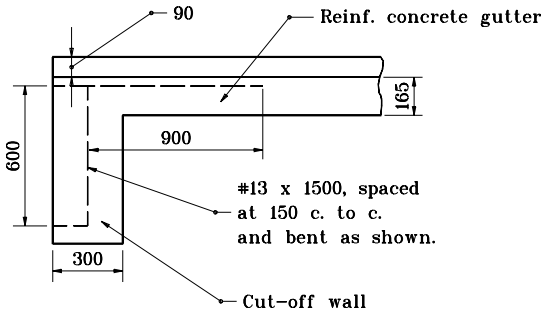

SECTION F-F

All dimensions are in mm unless otherwise specified.

INDIANA DEPARTMENT OF TRANSPORTATION

REINFORCED CONCRETE GUTTER TURNOUT

SEPTEMBER 1997

STANDARD DRAWING NO. **605-GTRC-02**

ANTHONY L. UREMOVICH REGISTERED No. 18095 STATE OF INDIANA PROFESSIONAL ENGINEER

/s/ Anthony L. Uremovich 9-01-97
DESIGN STANDARDS ENGINEER DATE

/s/ Donald W. Lucas 9-01-97
CHIEF HIGHWAY ENGINEER DATE

DESIGN STANDARDS ENGINEER

Source Sheet: MB1