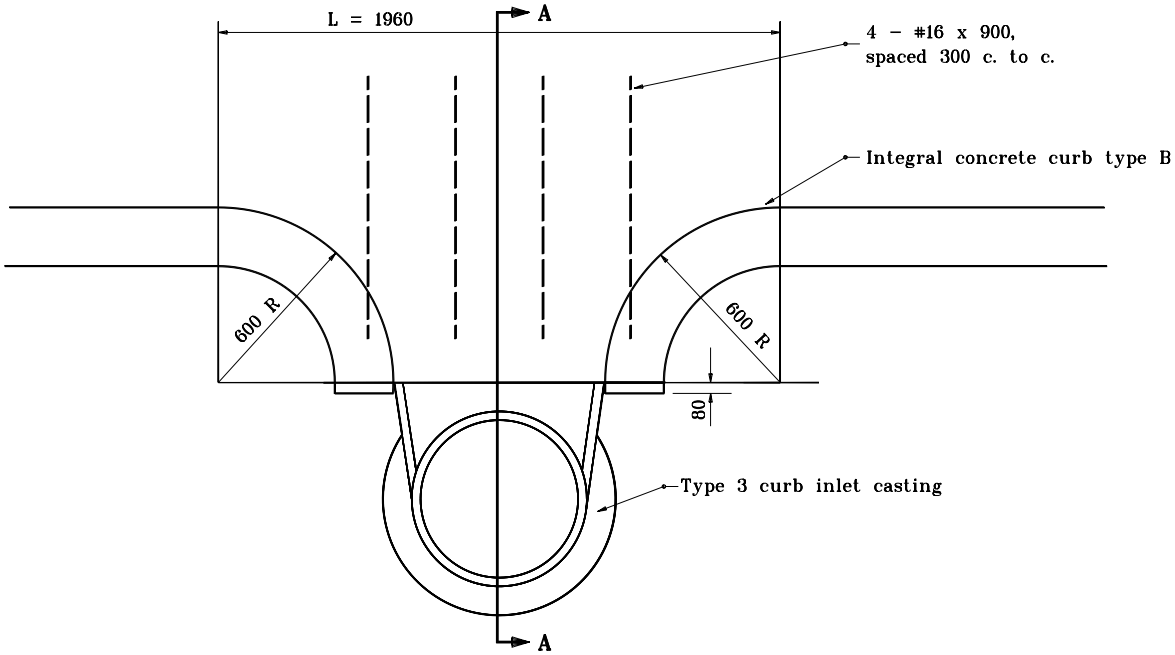


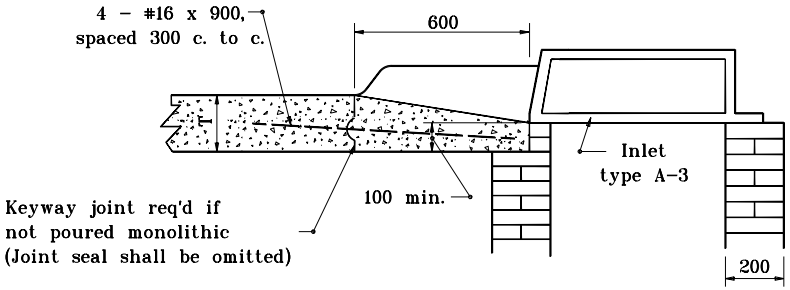


**SECTION A–A**

## GENERAL NOTES

1. See Standard Drawing 501–CCPJ–08 for keyway joint details.

All dimensions are in mm unless otherwise specified.

INDIANA DEPARTMENT OF TRANSPORTATION

**CURB TURNOUT TO A–3 INLET**

SEPTEMBER 1997

STANDARD DRAWING NO. **605–CTIN–01**

ANTHONY L. UREMOVICH REGISTERED No. 18095 STATE OF INDIANA PROFESSIONAL ENGINEER

DESIGN STANDARDS ENGINEER

/s/ Anthony L. Uremovich 9–01–97
DESIGN STANDARDS ENGINEER DATE

/s/ Donald W. Lucas 9–01–97
CHIEF HIGHWAY ENGINEER DATE

Source Sheet: MB1