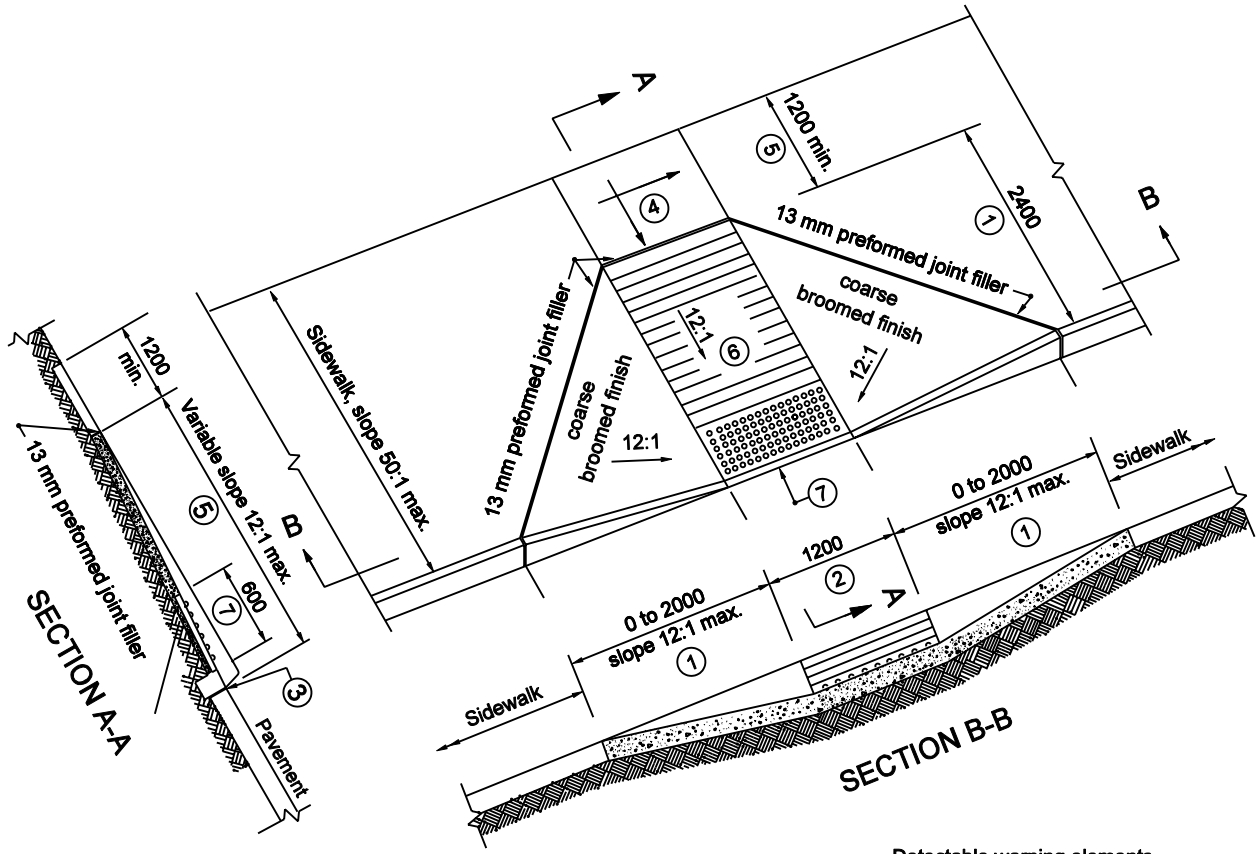

NOTES :

6. See Standard Drawing 604-SWCR-02 for groove details.
7. See Standard Drawing 604-SWCR-02 for details of the detectable warnings.
8. See Standard Drawing 604-SWCR-02 for alternate curb construction.
9. Indicated area denotes pay limits.
10. See Standard Drawing 604-SWCR-01 and -02 for Location Plan and General Notes respectively.

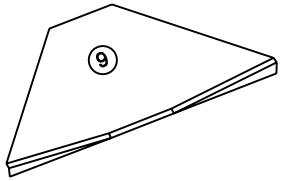

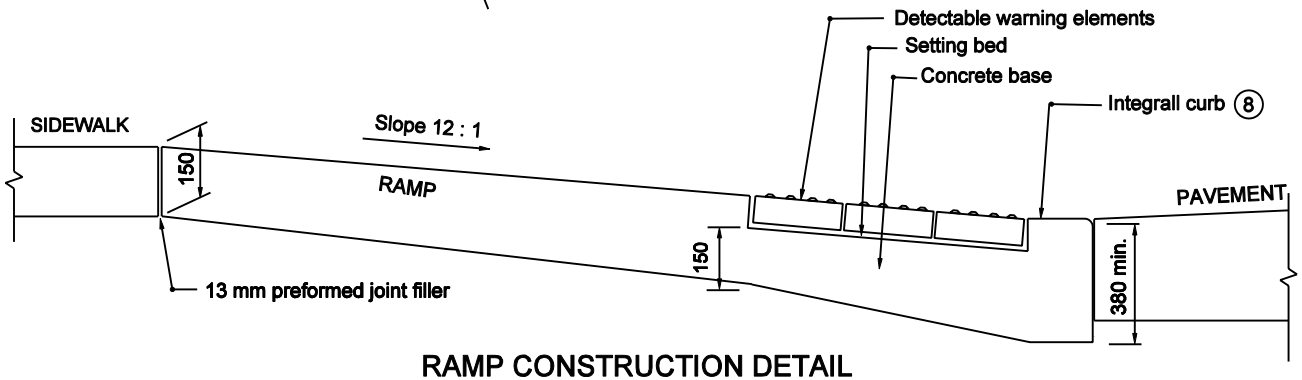

RAMP CONSTRUCTION DETAIL

All Dimension are in mm unless otherwise specfied

INDIANA DEPARTMENT OF TRANSPORTATION

SIDEWALK CURB RAMP
TYPE A

SEPTEMBER 2003

STANDARD DRAWING NO. 604-SWCR-03

REGISTERED ANTHONY L. UREMOVICH No. 18095 STATE OF INDIANA PROFESSIONAL ENGINEER

DESIGN STANDARDS ENGINEER

/s/ Anthony L. Uremovich 9-02-03
DESIGN STANDARDS ENGINEER DATE

/s/ Richard L. Sumtzer 9-02-03
CHIEF HIGHWAY ENGINEER DATE