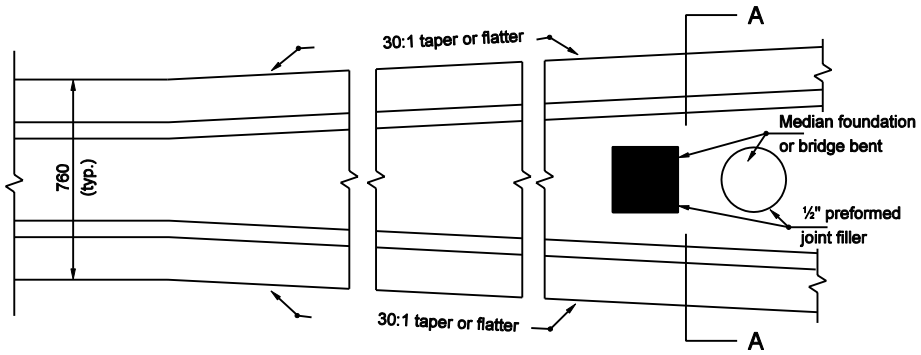

PLAN VIEW AT
INTEGRAL MEDIAN FOUNDATION OR BRIDGE BENT

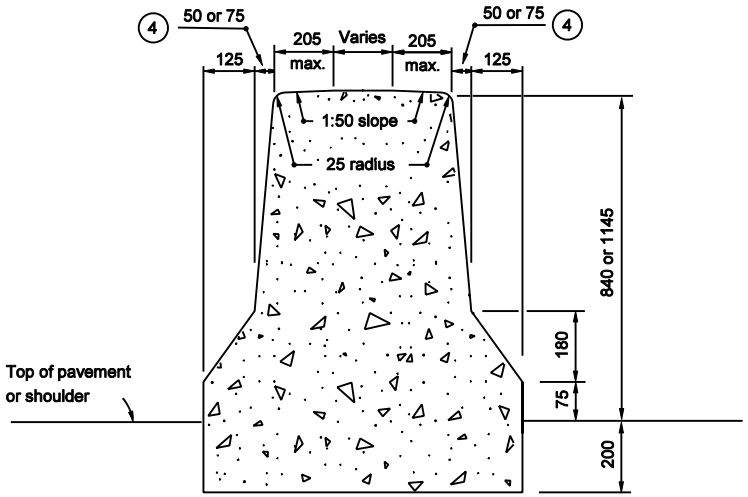

SECTION A-A

NOTES :

1. All integral median foundations shall be constructed as shown.
2. At a bridge pier, the faces of the concrete barrier shall be transitioned at a 30:1 taper to match configuration of the pier stem. At a median bridge bent, the faces of the concrete barrier shall be transitioned at a 30:1 taper to match the configuration of the crash wall. If the height of the crash wall is less than the height of the concrete barrier, the height of the crash wall shall be increased, as detailed elsewhere on the plans, to match the height of the concrete barrier.
3. An appropriate type of impact attenuator shall be designated for the ends of the concrete barrier, when it is exposed to traffic within the roadway clear zone.

(4) Use 50 mm for 840 mm height concrete barrier wall and 75 mm for 1145 mm height concrete barrier wall.

All Dimension are in mm unless otherwise specfied

INDIANA DEPARTMENT OF TRANSPORTATION

CONCRETE BARRIER DETAILS

MARCH 2003

STANDARD DRAWING NO. 602-CCMB-03

RICHARD L. VanCLEAVE REGISTERED No. 9750 STATE OF INDIANA PROFESSIONAL ENGINEER

DESIGN STANDARDS ENGINEER

/s/ Richard L. VanCleave 3-03-03
DESIGN STANDARDS ENGINEER DATE

/s/ Richard K. Smutzer 3-03-03
CHIEF HIGHWAY ENGINEER DATE