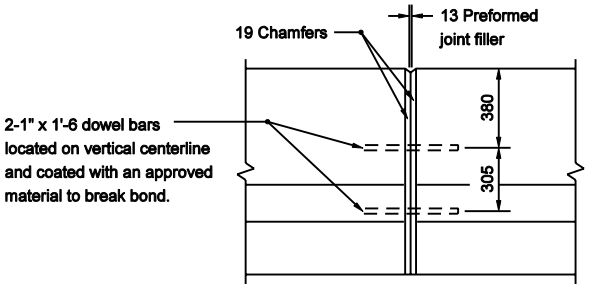

JOINT A

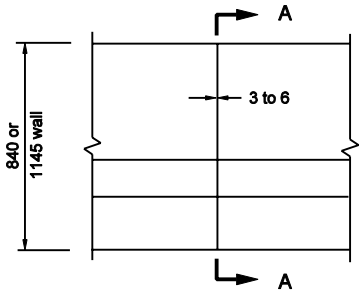

JOINT B

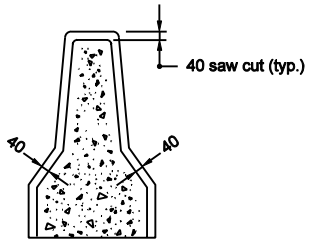

SECTION A-A

FORMED IN PLACE OR SLIP FORMED JOINTS

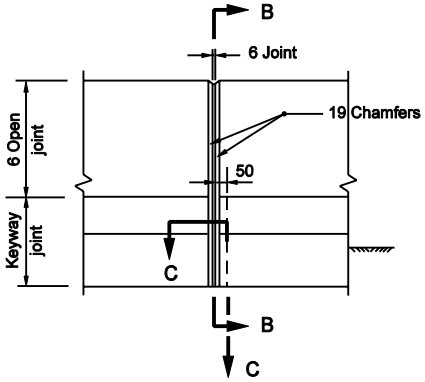

JOINT C

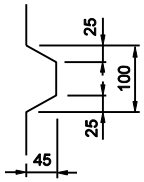

SECTION C-C

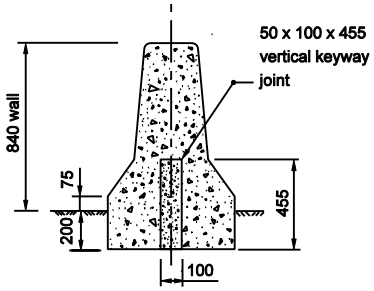

SECTION B-B

NOTES :

1. See Standard Drawing 602-CCMB-01 for joint placement.

PRECAST JOINT

All Dimension are in mm unless otherwise specfied

INDIANA DEPARTMENT OF TRANSPORTATION

CONCRETE BARRIER JOINT

MARCH 2003

STANDARD DRAWING NO. 602-CCMB-02

RICHARD L. VanCLEAVE REGISTERED No. 9750 STATE OF INDIANA PROFESSIONAL ENGINEER

DESIGN STANDARDS ENGINEER

/s/ Richard L. VanCleave 3-03-03
DESIGN STANDARDS ENGINEER DATE

/s/ Richard K. Smutzer 3-03-03
CHIEF HIGHWAY ENGINEER DATE