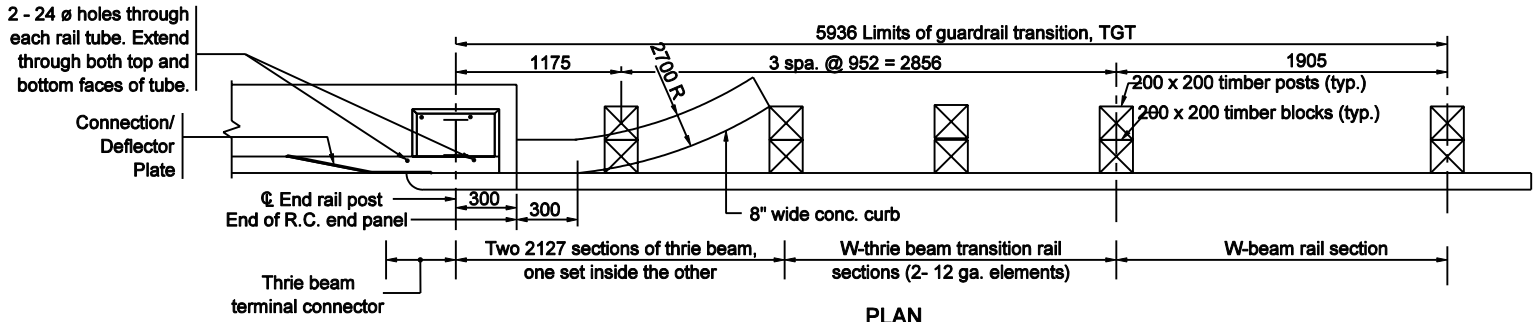

PLAN

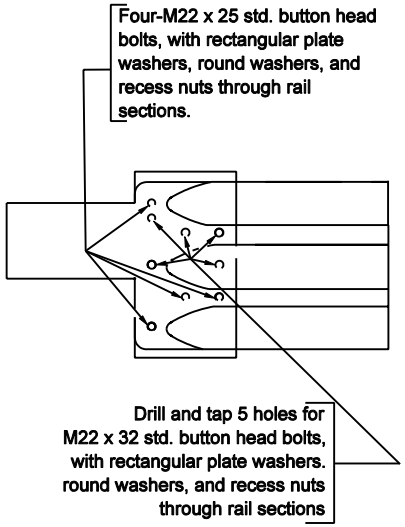

DETAIL A

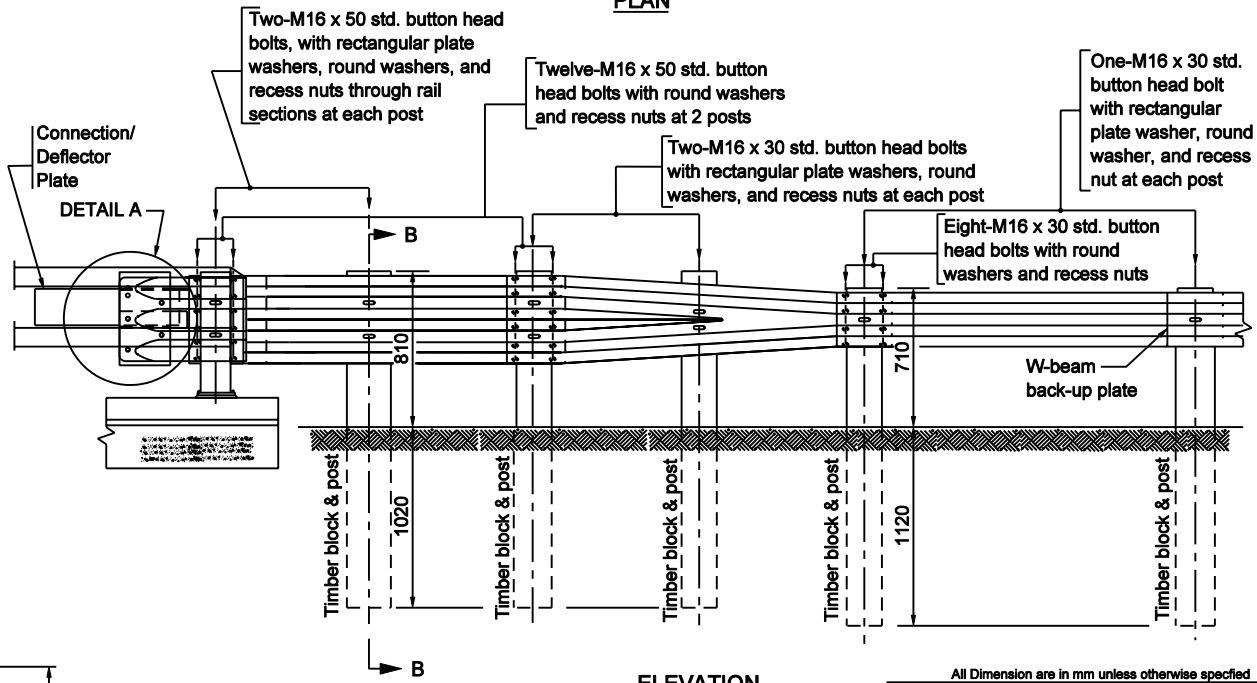

ELEVATION

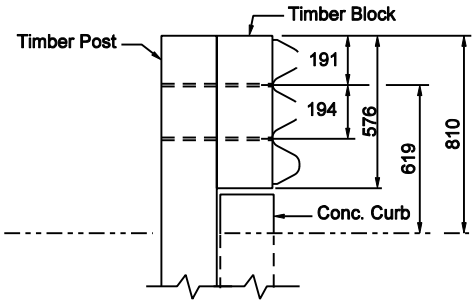

SECTION B - B

NOTES:

1. See Standard Drawing E 601-TBGC-01 and E 601-TBGC-02 for thrie beam transition details.
2. See Standard Drawing E 601-TTGT-02 for transition connection detail, timber post detail and timber block detail.

All Dimension are in mm unless otherwise specfied

INDIANA DEPARTMENT OF TRANSPORTATION

GUARDRAIL TRANSITION, TGT

SEPTEMBER 2003

STANDARD DRAWING NO. 601-TTGT-01

RICHARD L. VANCLEAVE REGISTERED No. 9750 STATE OF INDIANA PROFESSIONAL ENGINEER

DESIGN STANDARDS ENGINEER

/s/ Richard L. VanCleave 9-02-03
DESIGN STANDARDS ENGINEER DATE

/s/ Richard K. Smutzer 9-02-03
CHIEF HIGHWAY ENGINEER DATE