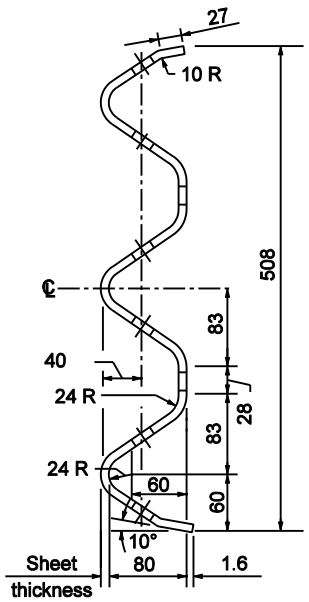

THRIE BEAM RAIL SECTION

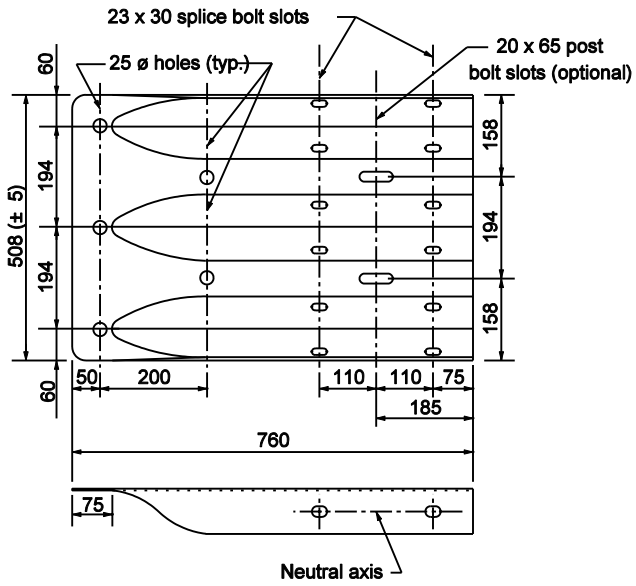

THRIE BEAM
TERMINAL CONNECTOR

NOTES:

1. This drawing shall be used where thrie-beam guardrail is specified. This drawing shall also be used if a thrie-beam guardrail system requires the use of standard W-beam guardrail components.

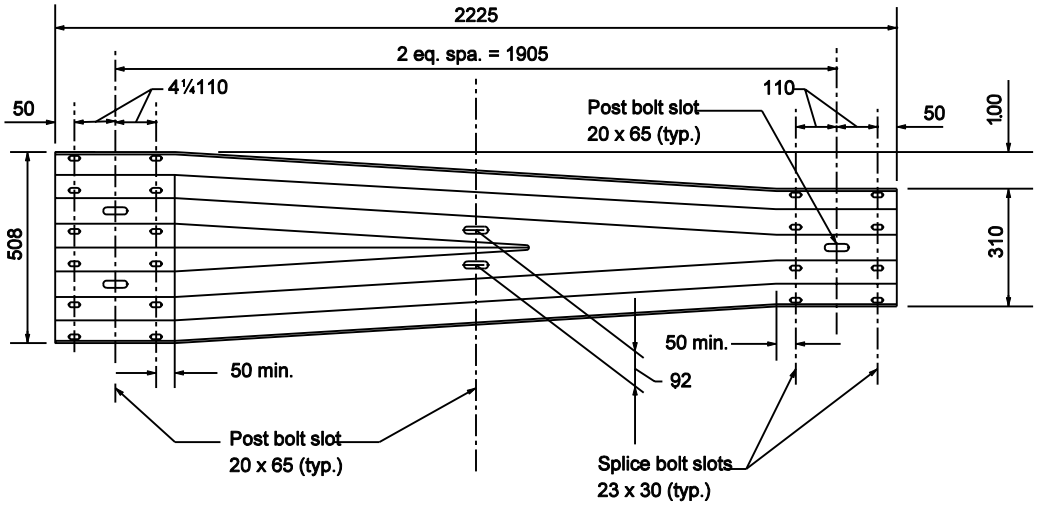

W-THRIE BEAM TRANSITION SECTION

All Dimension are in mm unless otherwise specfied

INDIANA DEPARTMENT OF TRANSPORTATION

THRIE-BEAM
GUARDRAIL COMPONENTS

MARCH 2003

STANDARD DRAWING NO. 601-TBGC-01

REGISTERED RICHARD L. VanCLEAVE No. 9750 STATE OF INDIANA PROFESSIONAL ENGINEER

DESIGN STANDARDS ENGINEER

/s/ Richard L. VanCleave 3-03-03
DESIGN STANDARDS ENGINEER DATE

/s/ Richard K. Smutzer 3-03-03
CHIEF HIGHWAY ENGINEER DATE