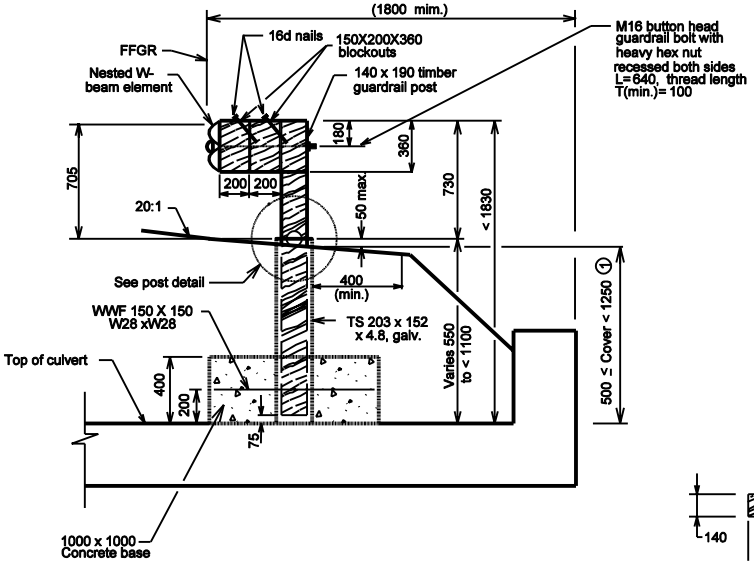

NESTED W-BEAM GUARDRAIL ASSY. WITH MODIFIED POSTS OVER STRUCTURE WIDTH (POSTS 5 TO 10)

NOTES:

① Use modified guardrail posts.

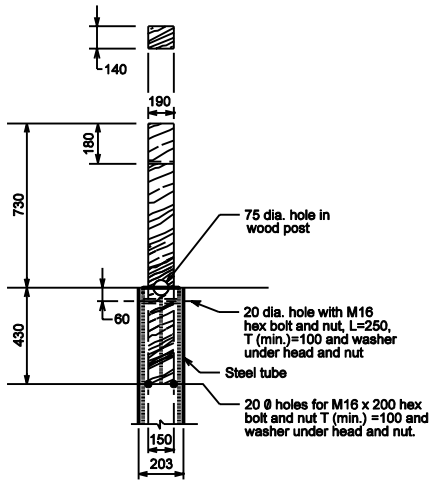

POST DETAIL

All Dimension are in mm unless otherwise specified

INDIANA DEPARTMENT OF TRANSPORTATION

GUARDRAIL ASSEMBLY FOR STRUCTURE WIDTH > 7400

SEPTEMBER 2001

STANDARD DRAWING NO. 601-NWGA-03

RICHARD L. VanCLEAVE REGISTERED No. 9750 STATE OF Indiana PROFESSIONAL ENGINEER

DESIGN STANDARDS ENGINEER

/s/ Richard L.VanCleave 9-04-01
DESIGN STANDARDS ENGINEER DATE

/s/ Firooz Zandi 9-04-01
CHIEF HIGHWAY ENGINEER DATE