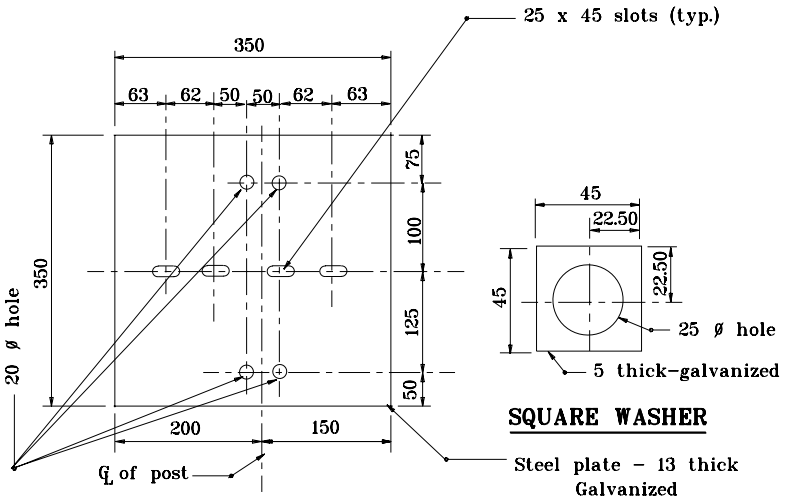

STEEL PLATE DETAIL

SQUARE WASHER

STEEL PLATE AND WASHER DETAILS

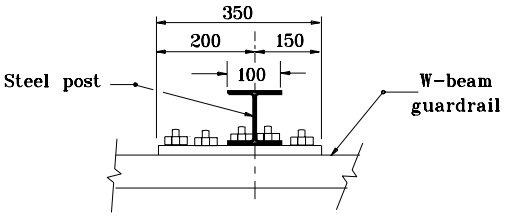

PLAN

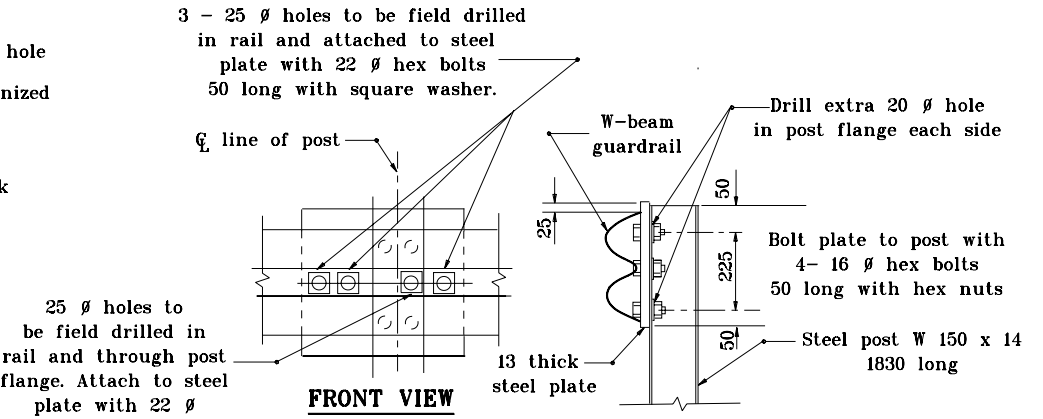

FRONT VIEW

ELEVATION

POST ANCHOR DETAILS

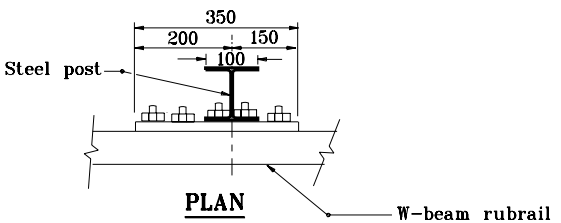

PLAN

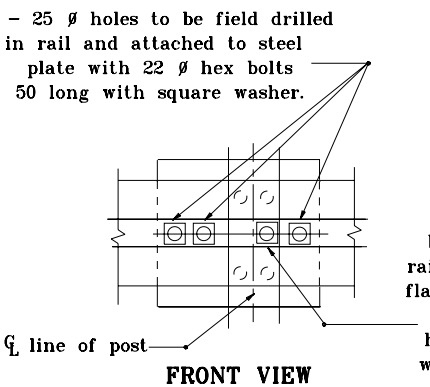

FRONT VIEW

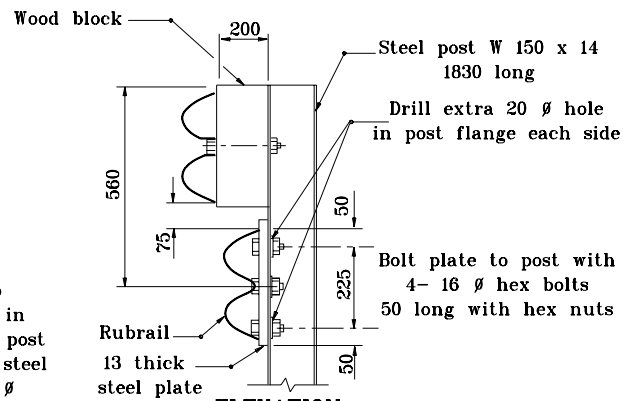

ELEVATION

RUBRAIL ANCHOR DETAILS

All dimensions are in mm unless otherwise specified.

INDIANA DEPARTMENT OF TRANSPORTATION

GUARDRAIL END TREATMENT
TPPE II–COMPONENTS

SEPTEMBER 2000

STANDARD DRAWING NO. **601–GRET–11**

ANTHONY L. UREMOVICH REGISTERED No. 18095 STATE OF INDIANA PROFESSIONAL ENGINEER

DESIGN STANDARDS ENGINEER

/s/ Anthony L. Uremovich 9–01–00
DESIGN STANDARDS ENGINEER DATE

/s/ Firooz Zandi 9–01–00
CHIEF HIGHWAY ENGINEER DATE