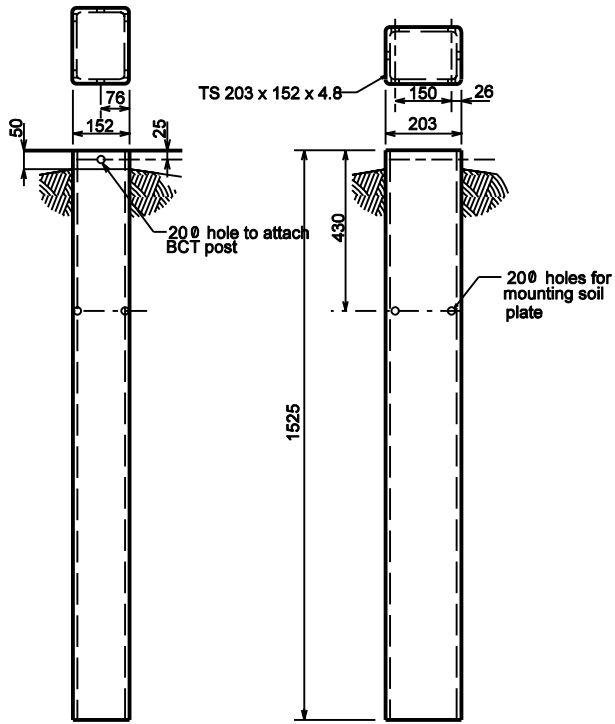

FRONT SIDE

GALVANIZED STEEL
FOUNDATION TUBE

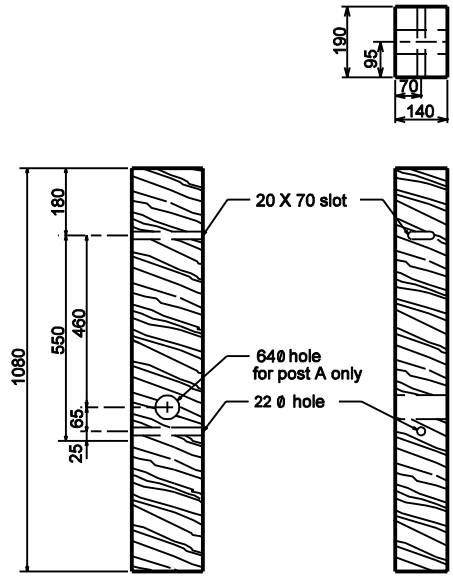

SIDE FRONT

BCT TIMBER POST

All Dimension are in mm unless otherwise specified

INDIANA DEPARTMENT OF TRANSPORTATION

CABLE TERMINAL
ANCHOR SYSTEM

SEPTEMBER 2001

STANDARD DRAWING NO. 601-GCTA-03

RICHARD L. VANCLEAVE REGISTERED No. 9750 STATE OF INDIANA PROFESSIONAL ENGINEER

DESIGN STANDARDS ENGINEER

/s/ Richard L. VanCleave 9-04-01
DESIGN STANDARDS ENGINEER DATE

/s/ Firooz Zandi 9-04-01
CHIEF HIGHWAY ENGINEER DATE