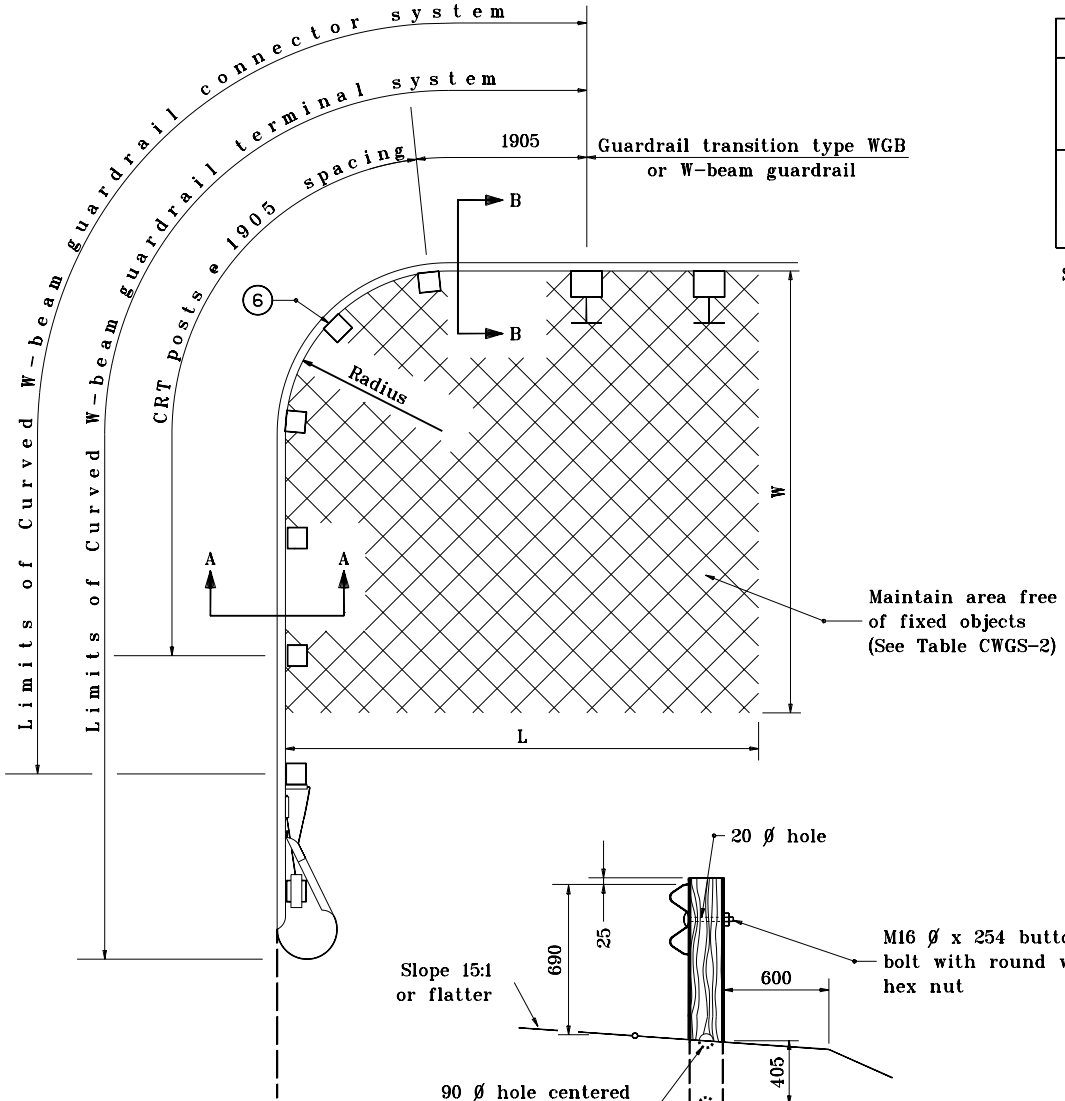


| TABLE CWGS-2 | | |
|---|---|---|
| RADIUS | NO. OF CRT POSTS | REQUIRED AREA FREE OF FIXED OBJECTS L x W |
| 2590 | 5 | 7620 x 4570 |
| 5180 | 6 | 9140 x 4570 |
| 7770 | 8 | 12190 x 6100 |
| 10670 | 11 | 15240 x 6100 |

See Standard Drawing 601-CWGS-03 for General Notes.

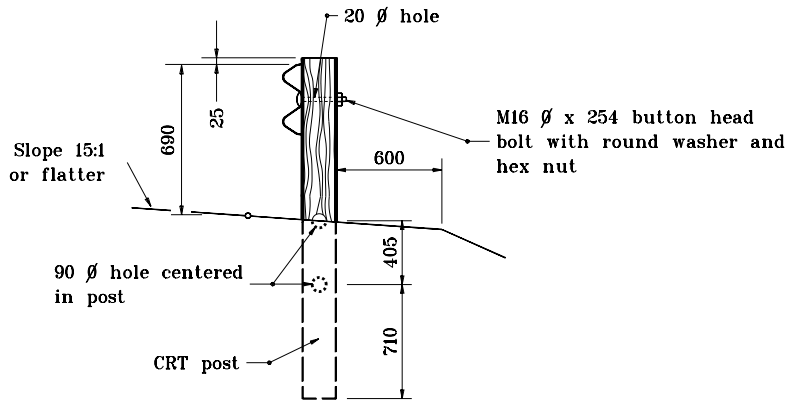


SECTION A-A

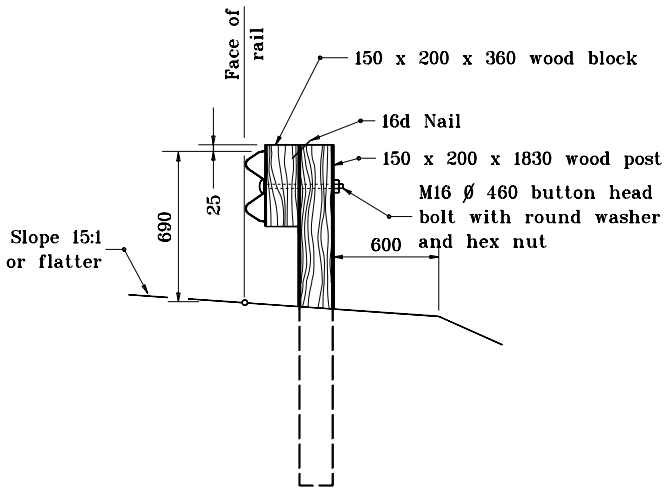


SECTION B-B

All dimensions are in mm unless otherwise specified.

INDIANA DEPARTMENT OF TRANSPORTATION

# CURVED W-BEAM GUARDRAIL SYSTEM

JANUARY 2000

STANDARD DRAWING NO. **601-CWGS-02**

ANTHONY L. UREMOVICH REGISTERED No. 18095 STATE OF INDIANA PROFESSIONAL ENGINEER

DESIGN STANDARDS ENGINEER

/s/ Anthony L. Uremovich 1-03-00
DESIGN STANDARDS ENGINEER DATE

/s/ Firooz Zandi 1-03-00
CHIEF HIGHWAY ENGINEER DATE