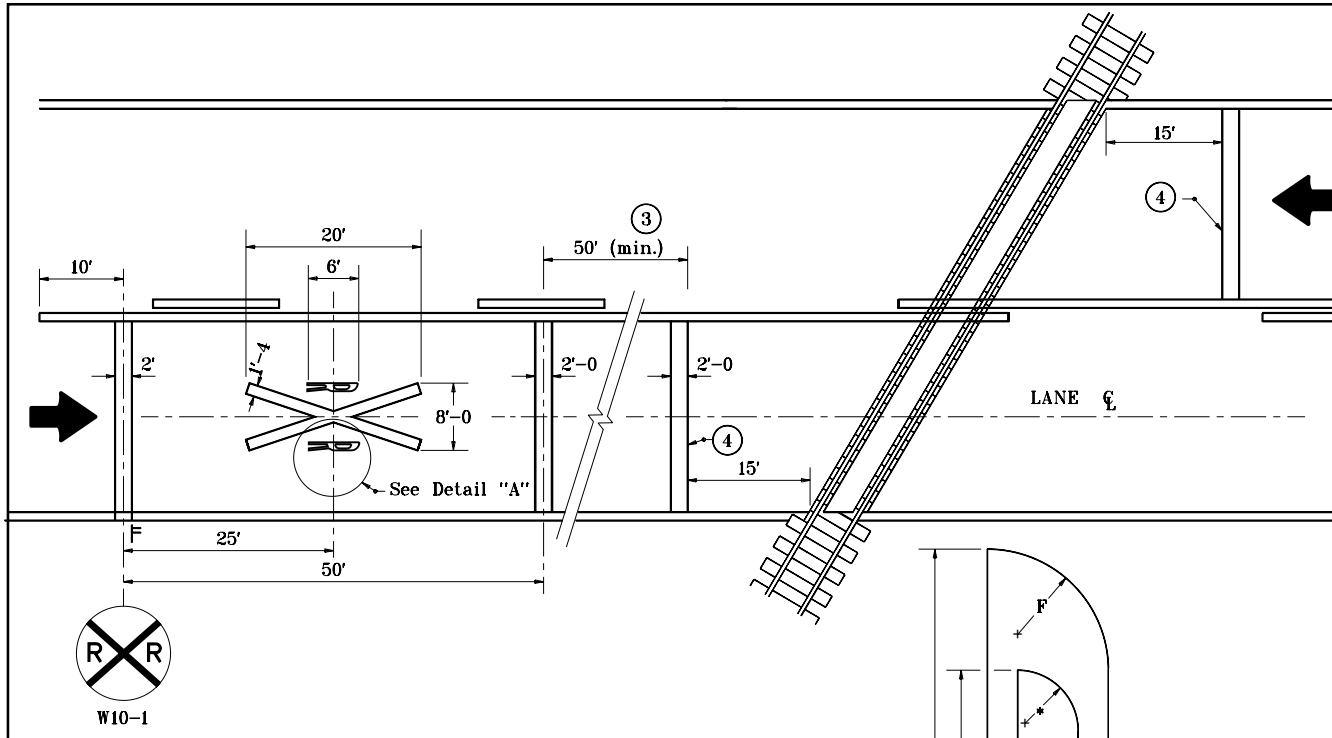


## GENERAL NOTES

1. For 2-way left-turn lanes, the center lane shall be discontinued across the railroad crossing and marked as a flush median or as a 1-way left-turn lane.

2. For a multi-lane highway, the tranverse lines shall be extended across all approach lanes, and the individual railroad crossing symbols provided in each lane.

(3) Stopping sight distance in rural areas; variable in urban areas, but not less than 50 ft. See Stopping Sight Distance Table.

(4) Stop line is approximately 8 ft from gate (if present).

## STOPPING SIGHT DISTANCE (3)

| DESIGN SPEED (mph) | Distance, ft |
|---|---|
| 30 | 200 |
| 35 | 275 |
| 40 | 325 |
| 45 | 400 |
| 50 | 475 |
| 55 | 575 |
| 60 | 650 |

A = $2\frac{3}{4}$"
B = $11\frac{1}{2}$"
C = 1'-11
D = 2'-1
E = 6'-0
F = $11\frac{1}{2}$"
* = $5\frac{3}{4}$" R

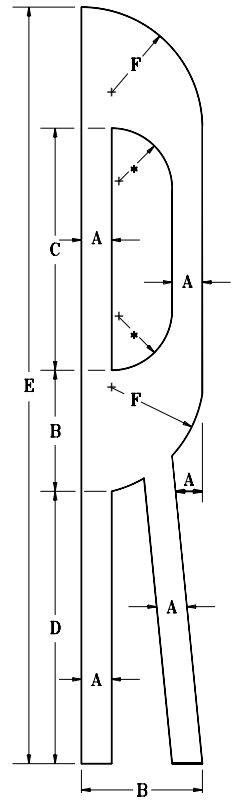


## DETAIL "A"

INDIANA DEPARTMENT OF TRANSPORTATION

# PAVEMENT MARKING FOR RAILROAD CROSSINGS

JANUARY 2000

STANDARD DRAWING NO. E 808-MKPM-07

ANTHONY L. UREMOVICH REGISTERED No. 18095 STATE OF INDIANA PROFESSIONAL ENGINEER

DESIGN STANDARDS ENGINEER

/s/ Anthony L. Uremovich 1-03-00
DESIGN STANDARDS ENGINEER DATE

/s/ Firooz Zandi 1-03-00
CHIEF HIGHWAY ENGINEER DATE