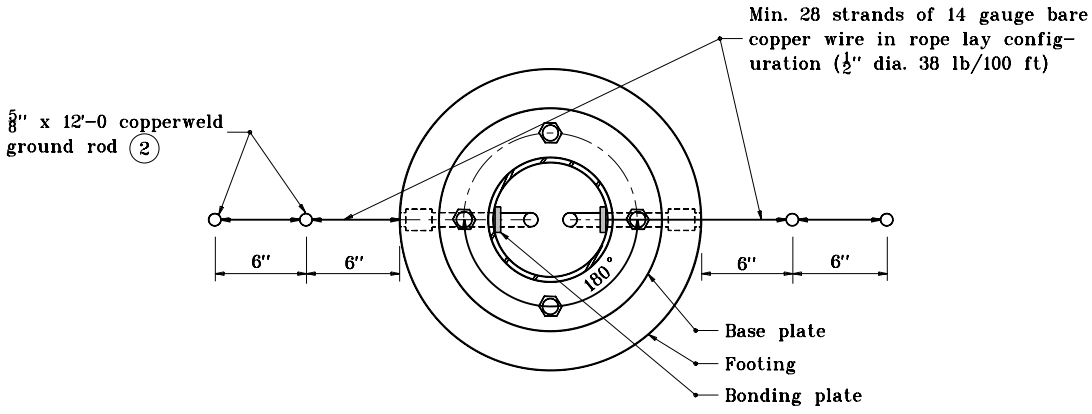

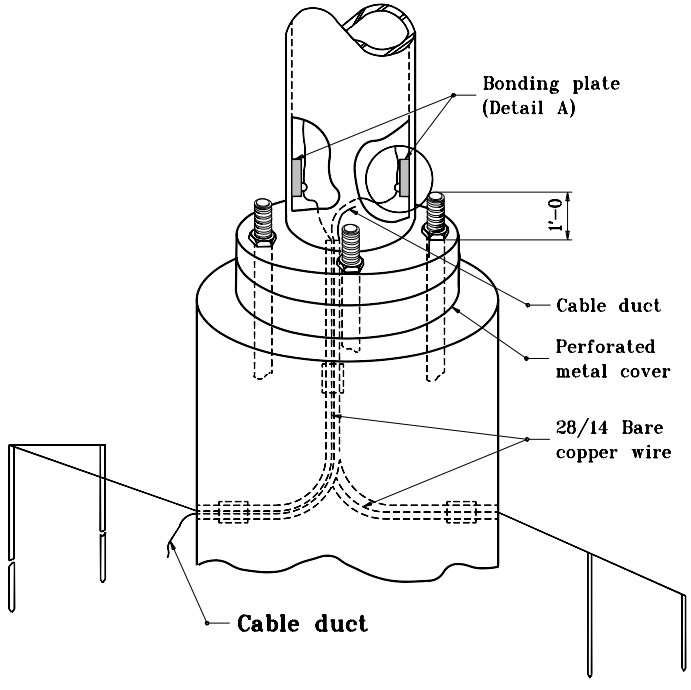

GENERAL NOTES

1. Shop drawings shall be submitted on lightning rod and connection details. Drawings are for informational purposes only. Only one lightning rod is required per structure.

(2) Grounding rod must be located a min. of 6 ft from base at a min. of 2 ft below grade.

For bonding plate detail, see Standard Drawing No. E 807-LTLR-02.

INDIANA DEPARTMENT OF TRANSPORTATION

LIGHTNING ROD TYPICAL DETAILS

MARCH 1995

STANDARD DRAWING NO. **E 807-LTLR-01**

ANTHONY L. UREMOVICH REGISTERED No. 18095 STATE OF INDIANA PROFESSIONAL ENGINEER

DESIGN STANDARDS ENGINEER

DETAILS PLACED IN THIS FORMAT	7-27-99
/s/ Anthony L. Uremovich DESIGN STANDARDS ENGINEER	7-27-99 DATE
/s/ Firooz Zandi CHIEF HIGHWAY ENGINEER	7-27-99 DATE
ORIGINALLY APPROVED	3-01-95