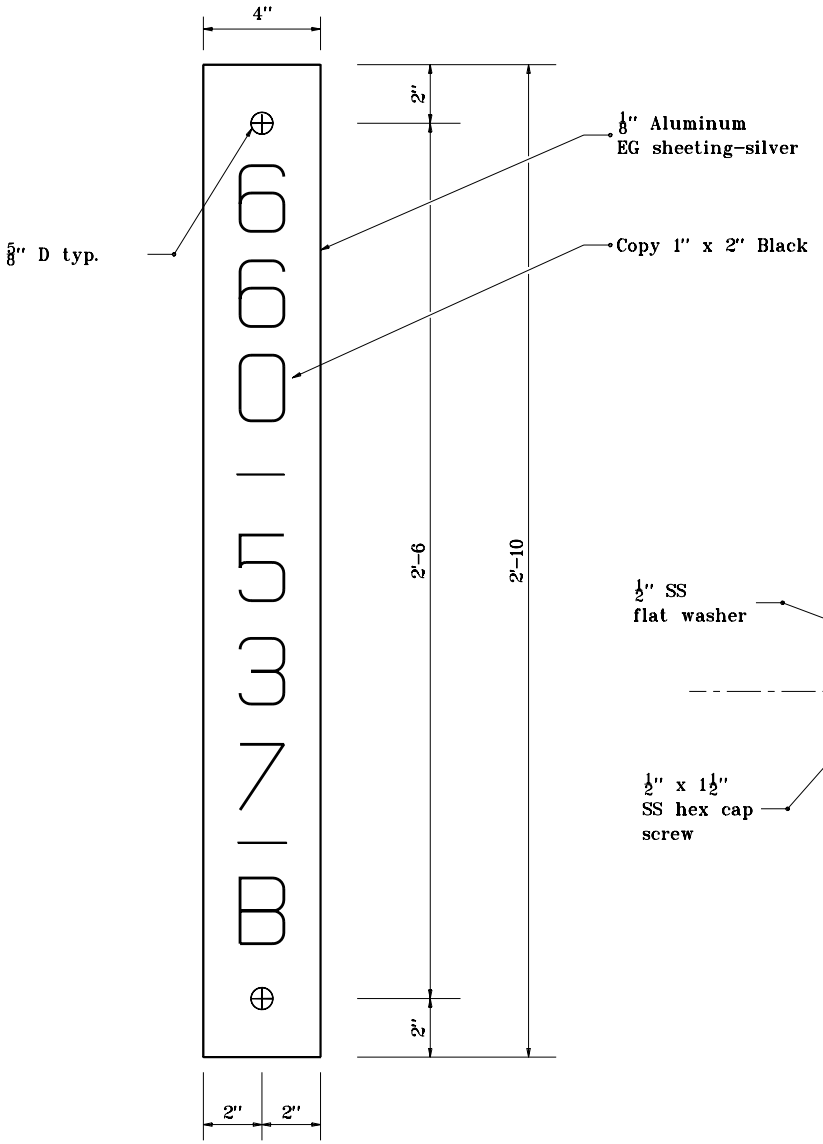

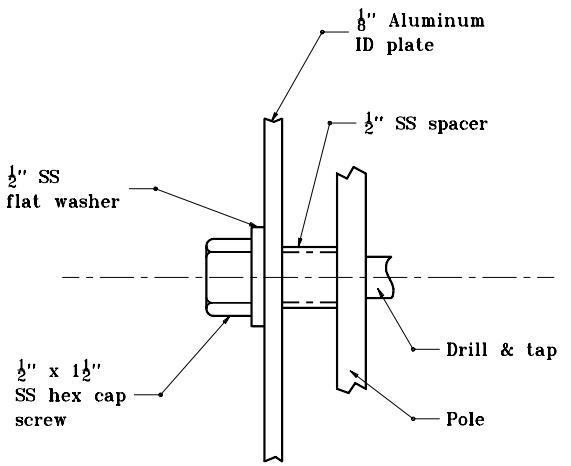

MOUNTING DETAIL

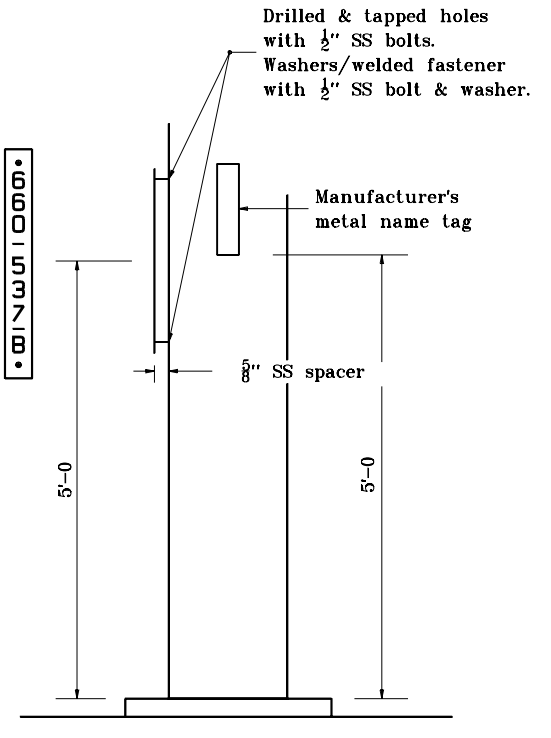

ID PLATES FOR HIGH MAST POLE

INDIANA DEPARTMENT OF TRANSPORTATION

HIGH MAST POLE
ID PLATES

MARCH 1995

STANDARD DRAWING NO. **E 807-LTHM-01**

ANTHONY L. URENOVICH REGISTERED No. 18095 STATE OF INDIANA PROFESSIONAL ENGINEER

DESIGN STANDARDS ENGINEER

DETAILS PLACED IN THIS FORMAT	11-15-99
/s/ Anthony L. Uremovich DESIGN STANDARDS ENGINEER	11-15-99 DATE
/s/ Firooz Zandi CHIEF HIGHWAY ENGINEER	11-15-99 DATE
ORIGINALLY APPROVED	3-01-95