GENERAL NOTES

1. Alternate handhole minimum size shall be 1'-7 x 2'-6 x 1'-10 depth with 2 in. lid thickness.
2. Approximate weight for cast iron ring and cover shall be 320 lb.

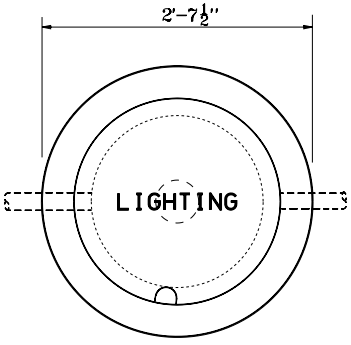

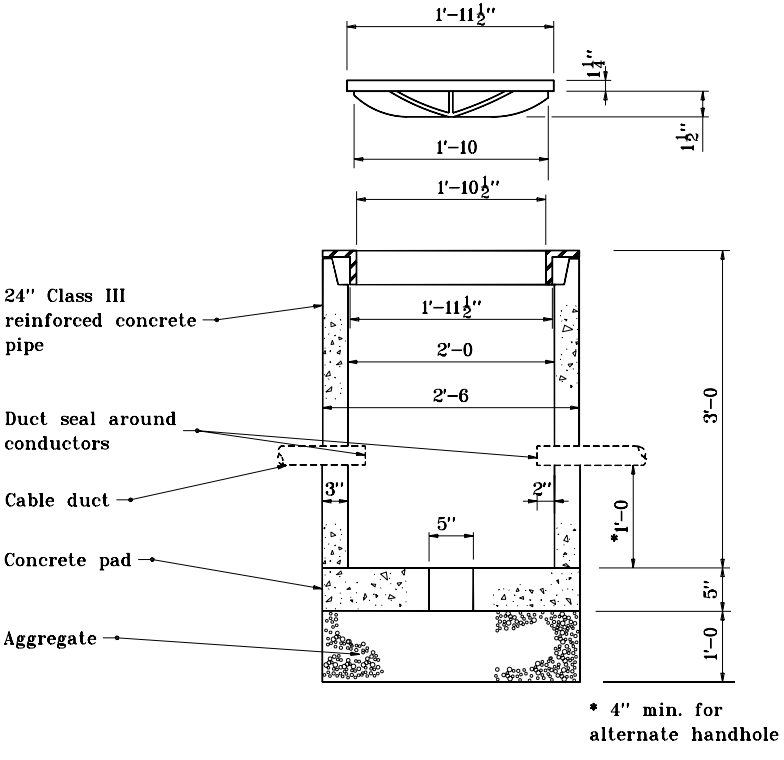

STREET & ALLEY TYPE HANDHOLE

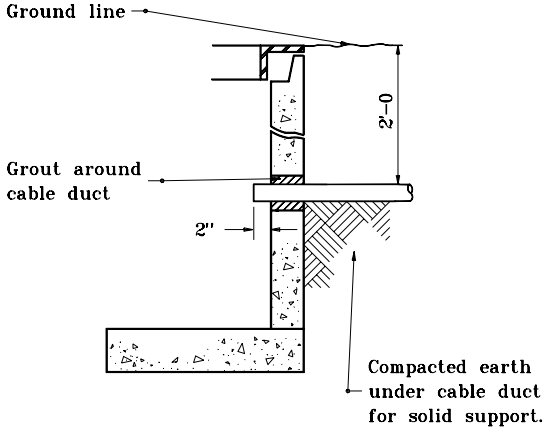

CABLE DUCT ENTERING HANDHOLE

INDIANA DEPARTMENT OF TRANSPORTATION

LIGHT HANDHOLE DETAILS

MARCH 1995

STANDARD DRAWING NO. E 807-LTHH-01

ANTHONY L. UREMOVICH REGISTERED No. 18095 STATE OF INDIANA PROFESSIONAL ENGINEER

DESIGN STANDARDS ENGINEER

DETAILS PLACED IN THIS FORMAT 7-27-99

/s/ Anthony L. Uremovich 7-27-99
DESIGN STANDARDS ENGINEER DATE

/s/ Firooz Zandi 7-27-99
CHIEF HIGHWAY ENGINEER DATE

ORIGIANLLY APPROVED 3-01-95