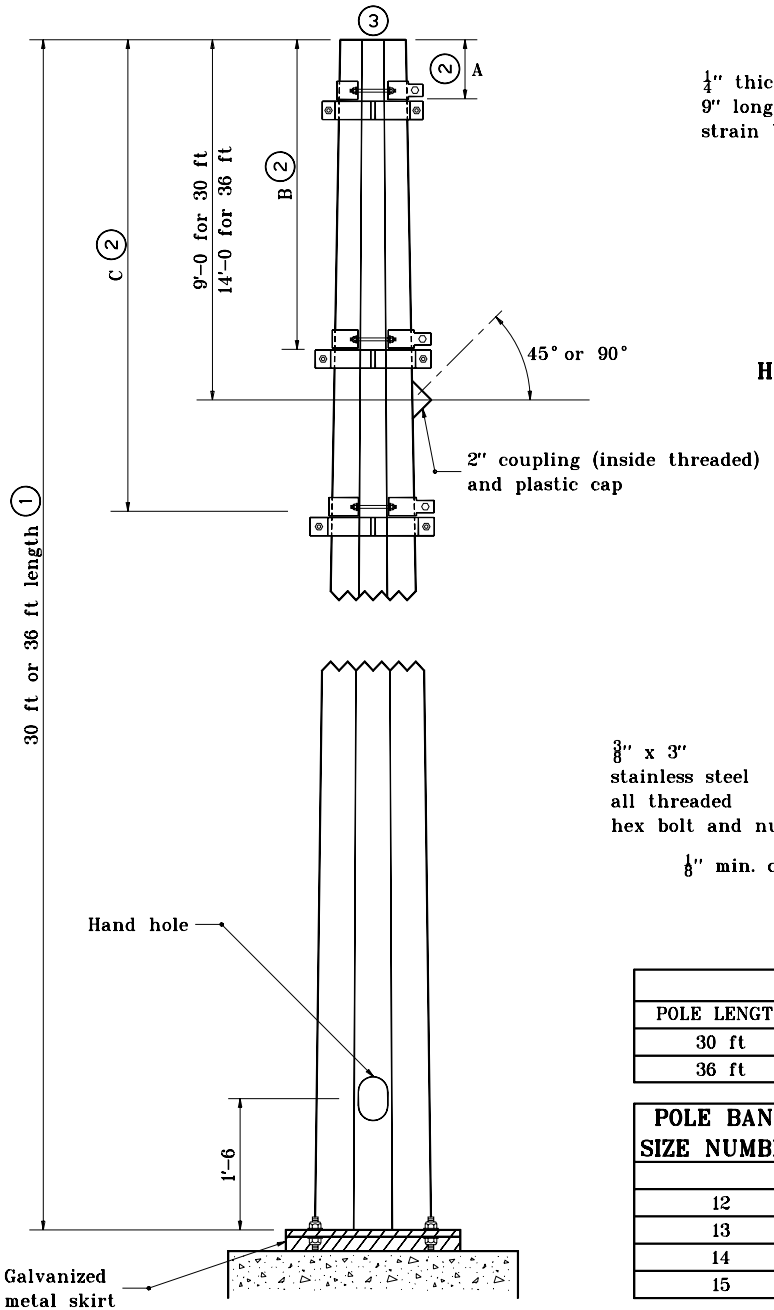

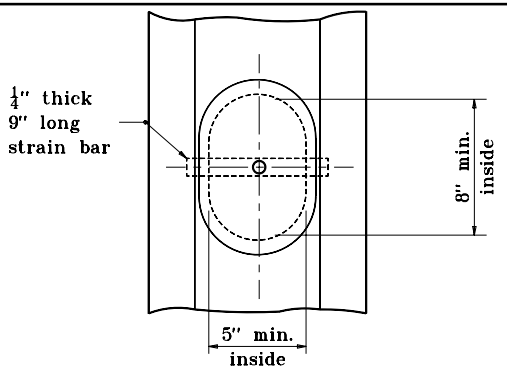

HANDHOLE AND GROUNDING LUG

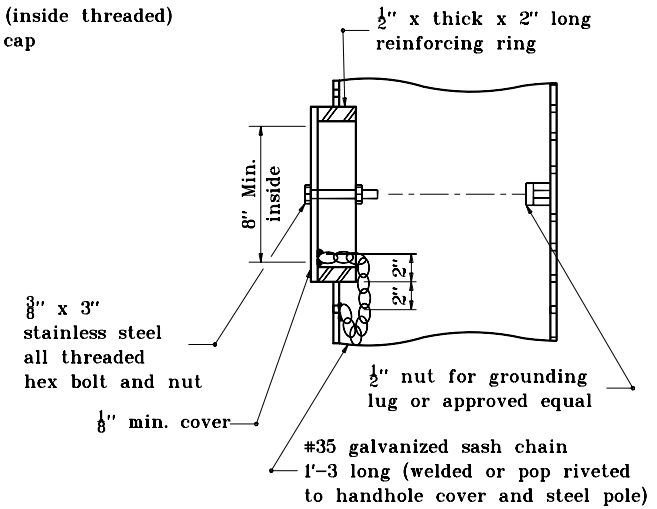

GENERAL NOTES:

1. Taper pole 1/8 in. per foot of length.
2. Band position can be variable depending of minimum clearance requirement of tether the cable over the road, and the elevation of the top of the foundation relative to the top of the traveled roadway.
3. Design load of 8500 lb applied perpendicular to pole axis 1'-6 from top of pole.

POLE BAND POSITION

POLE LENGTH	A	B	C
30 ft	6"	8'-0	12'-0
36 ft	1'-0	13'-0	17'-0

POLE BAND SIZE NUMBER	O.D.(ACROSS POINTS) OF POLE (ROUND OR MULTISIDED)	
	MIN.	MAX.
12	11	1'-1
13	1'-1	1'-2
14	1'-2	1'-3
15	1'-3	1'-4

INDIANA DEPARTMENT OF TRANSPORTATION

30 ft. AND 36 ft. SIGNAL STEEL STRAIN POLES

MARCH 1995

STANDARD DRAWING NO. E 805-SGSP-01

ANTHONY L. UREMOVICH REGISTERED No. 18095 STATE OF INDIANA PROFESSIONAL ENGINEER

DESIGN STANDARDS ENGINEER

DETAILS PLACED IN THIS FORMAT 11-15-99

/s/ Anthony L. Uremovich 11-15-99
DESIGN STANDARDS ENGINEER DATE

/s/ Firooz Zandi 11-15-99
CHIEF HIGHWAY ENGINEER DATE

ORIGINALLY APPROVED 3-01-95