TYPICAL LOOP DETECTION SAW-CUT PLAN (ONE LANE)

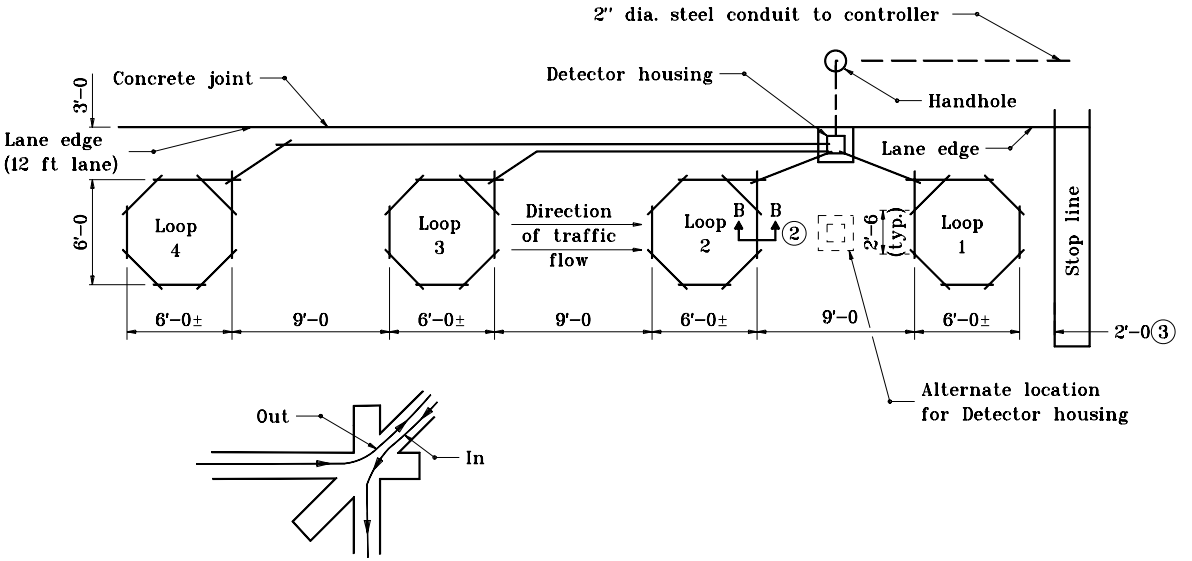

TYPICAL LOOP DETECTION (TWO LANES)

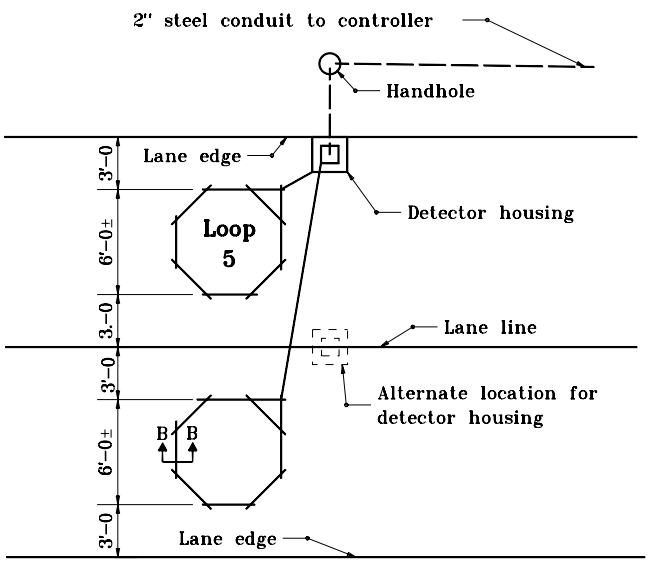

GENERAL NOTES

1. Loop saw-cuts as shown on plan sheets are to be considered as schematic only. In the event of discrepancies, this detail shall govern.

② See Standard Drawing E 805-SGLI-02 for Section B-B.

③ This distance is typical depending on the intersection geometrics; a loop can be sawed in front of the stop line.

INDIANA DEPARTMENT OF TRANSPORTATION

TRAFFIC SIGNAL LOOP INSTALLATION

MAY 1998

STANDARD DRAWING NO. **E 805-SGLI-01**

ANTHONY L. UREMOVICH REGISTERED No. 18095 STATE OF INDIANA PROFESSIONAL ENGINEER

DESIGN STANDARDS ENGINEER

DETAILS PLACED IN THIS FORMAT	11-15-99
/s/ Anthony L. Uremovich DESIGN STANDARDS ENGINEER	11-15-99 DATE
/s/ Firooz Zandi CHIEF HIGHWAY ENGINEER	11-15-99 DATE
ORIGINALLY APPROVED	5-01-98