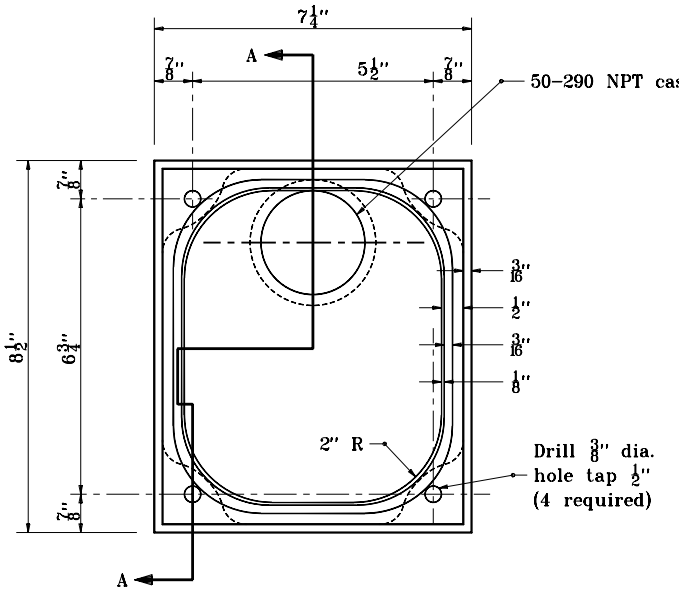

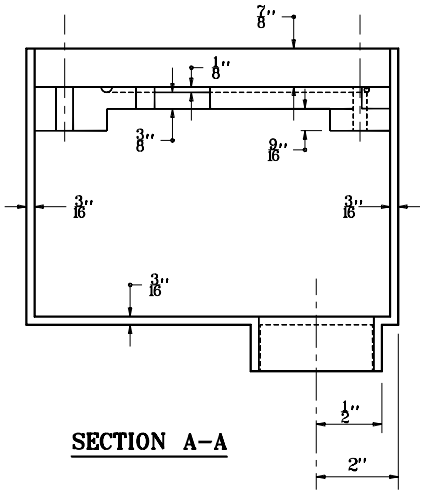

SECTION A-A

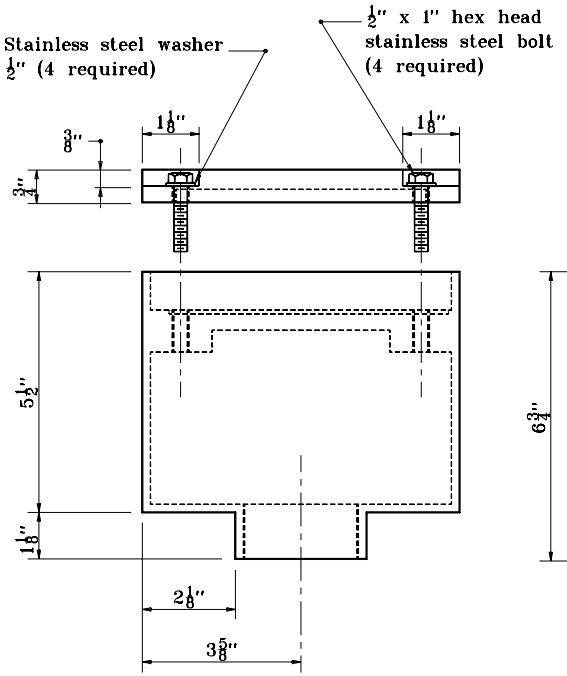

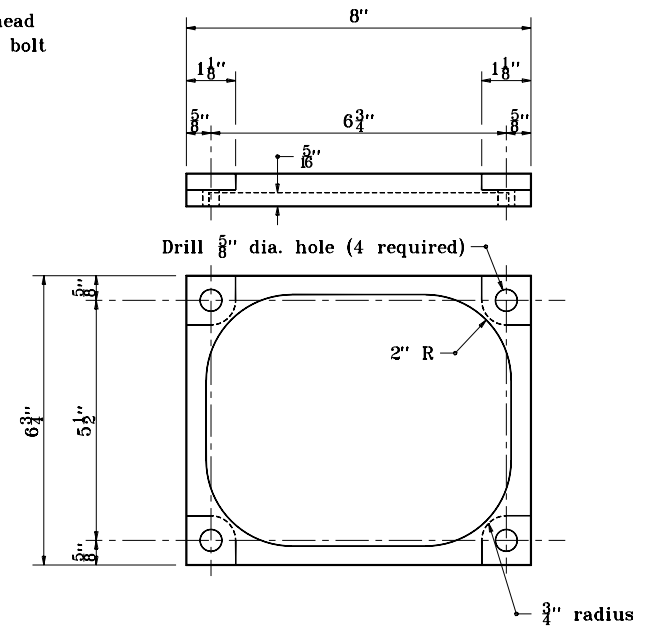

INDIANA DEPARTMENT OF TRANSPORTATION

DETAIL OF DETECTOR HOUSING

MAY 1998

STANDARD DRAWING NO. E 805-SGDH-02

	DETAILS PLACED IN THIS FORMAT	11-15-99
	/s/ Anthony L. Uremovich DESIGN STANDARDS ENGINEER	11-15-99 DATE
	/s/ Firooz Zandi CHIEF HIGHWAY ENGINEER	11-15-99 DATE
DESIGN STANDARDS ENGINEER	ORIGINALLY APPROVED	5-01-98

ANTHONY L. UREMOVICH REGISTERED No. 18095 STATE OF INDIANA PROFESSIONAL ENGINEER