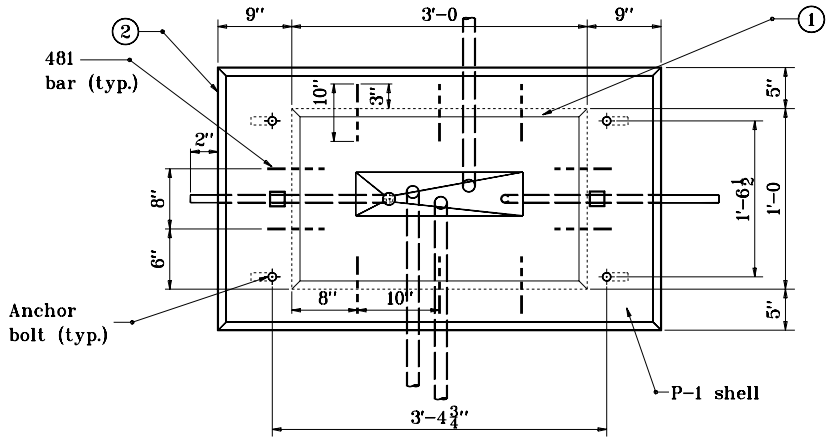

PLAN

NOTES:

1. See Standard Drawing E 805-SGCF-02 for M foundation details.
2. See Standard Drawing E 805-SGCF-01 for P-1 foundation details.
3. Existing anchor bolts shall be cut at or below top of existing foundation.
4. See Standard Drawing E 805-SGCF-03 for General Notes.

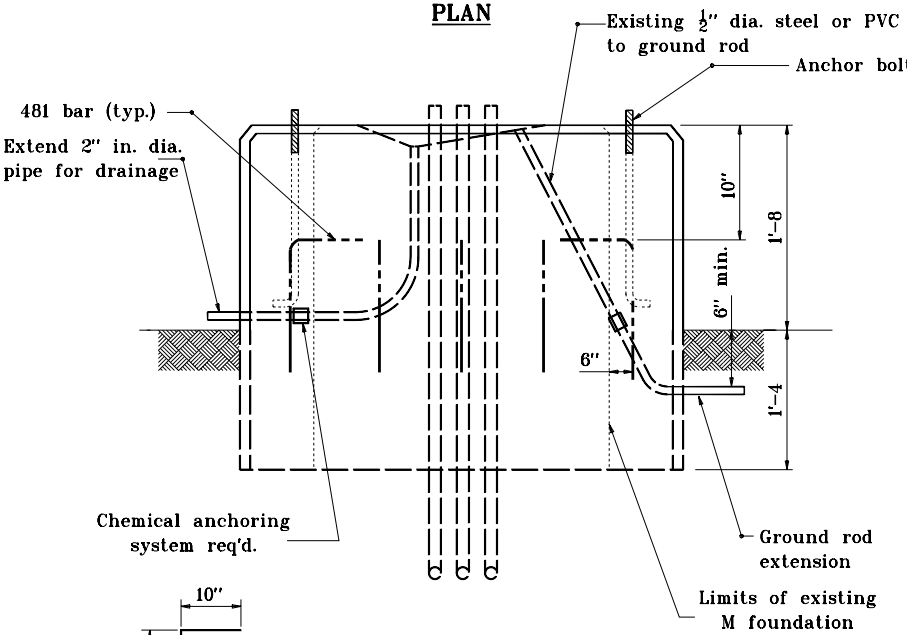

FRONT VIEW

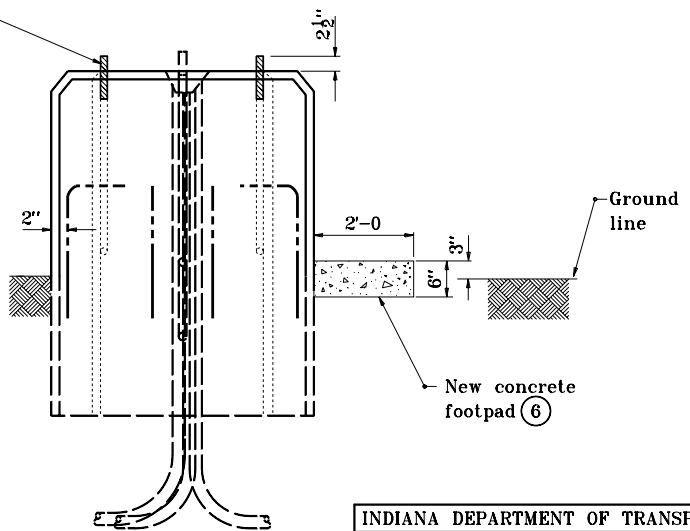

SIDE VIEW

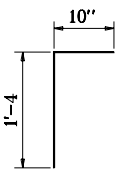

1081 x 660

INDIANA DEPARTMENT OF TRANSPORTATION

EXISTING M FOUNDATION MODIFIED TO P-1 FOUNDATION

SEPTEMBER 1998

STANDARD DRAWING NO. **E 805-SGCF-05**

ANTHONY L. UREMOVICH REGISTERED No. 18095 STATE OF INDIANA PROFESSIONAL ENGINEER

DESIGN STANDARDS ENGINEER

DETAILS PLACED IN THIS FORMAT	11-15-99
/s/ Anthony L. Uremovich DESIGN STANDARDS ENGINEER	11-15-99 DATE
/s/ Firooz Zandi CHIEF HIGHWAY ENGINEER	11-15-99 DATE
ORIGINALLY APPROVED	9-01-98