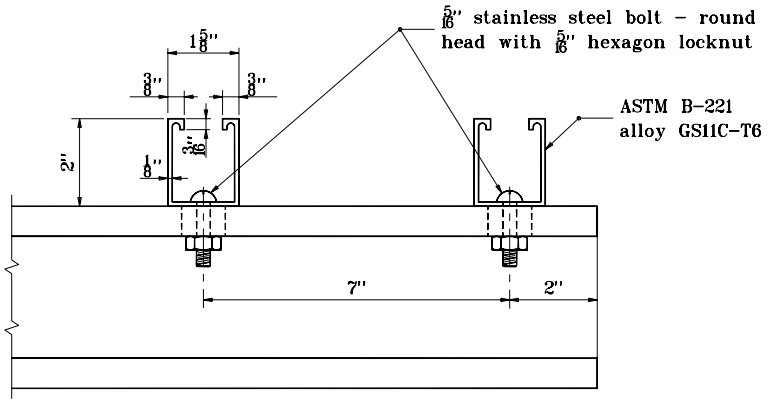

SECTION F-F

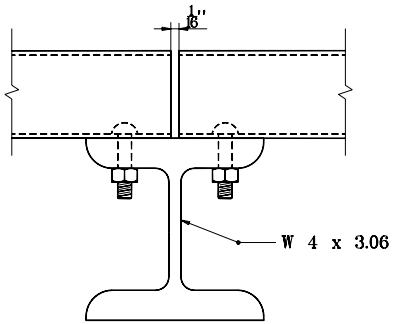

SECTION G-G

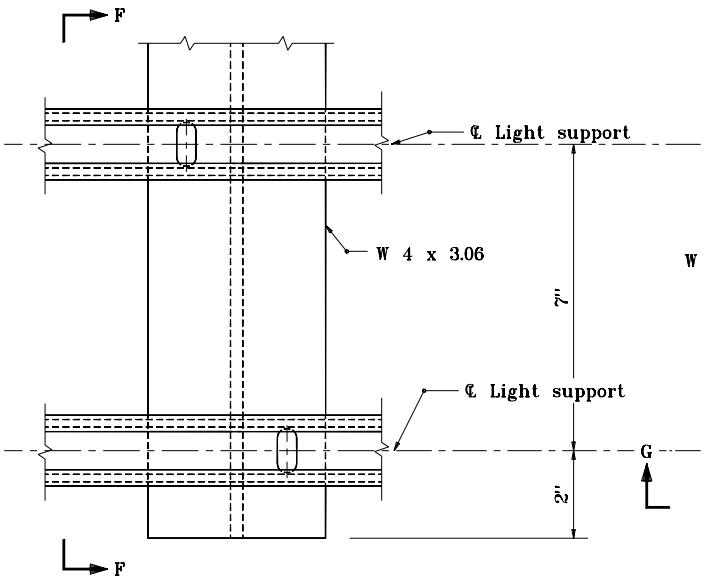

DETAIL F

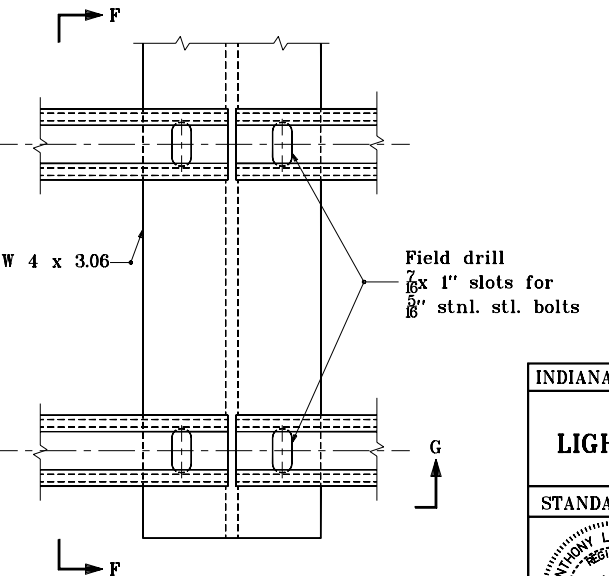

DETAIL G

INDIANA DEPARTMENT OF TRANSPORTATION

SIGN DETAILS
LIGHTING FIXTURE MOUNTS

SEPTEMBER 2001

STANDARD DRAWING NO. **E 802-SNWW-06**

ANTHONY L. UREMOVICH REGISTERED No. 18095 STATE OF INDIANA PROFESSIONAL ENGINEER

DESIGN STANDARDS ENGINEER

/s/ Anthony L. Uremovich — DESIGN STANDARDS ENGINEER — 9-04-01 DATE

/s/ Firooz Zandi — CHIEF HIGHWAY ENGINEER — 9-04-01 DATE