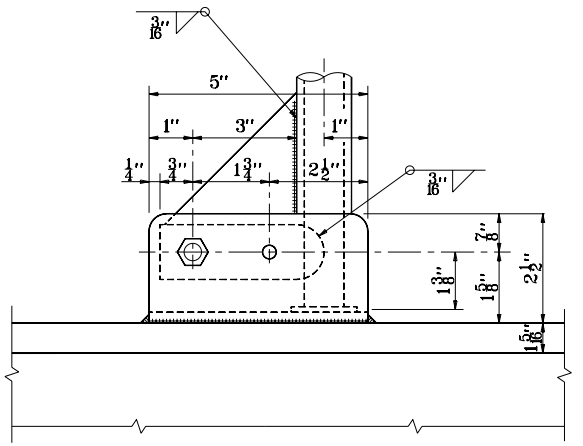

SIDE ELEVATION

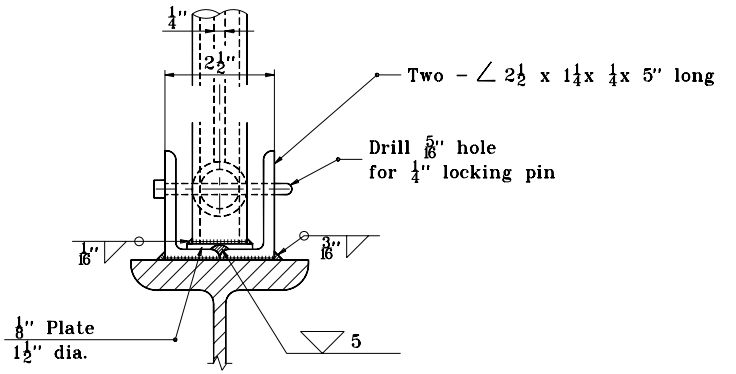

FRONT ELEVATION

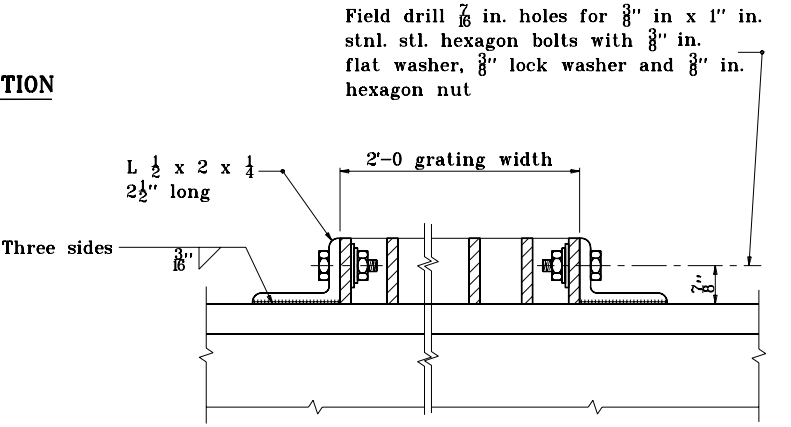

GRATING TIE DOWN
(Two req'd per walkway bracket)

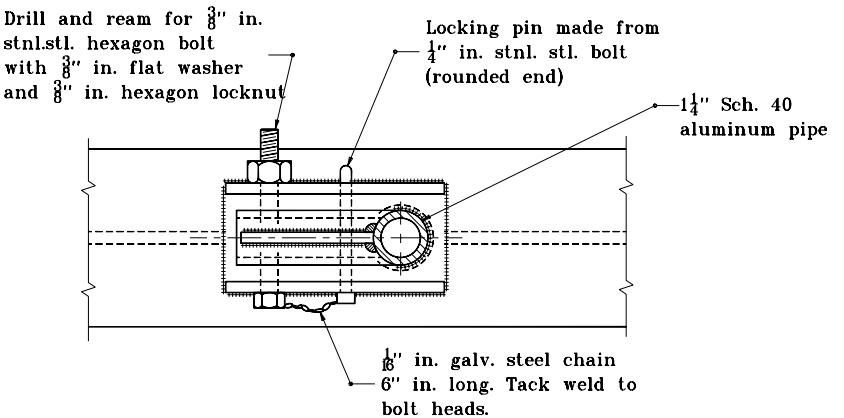

PLAN

DETAILS OF HANDRAIL HINGE

INDIANA DEPARTMENT OF TRANSPORTATION

SIGN WALKWAY HANDRAIL DETAILS

SEPTEMBER 2001

STANDARD DRAWING NO. **E 802-SNWW-05**

ANTHONY L. UREMOVICH REGISTERED No. 18095 STATE OF INDIANA PROFESSIONAL ENGINEER

DESIGN STANDARDS ENGINEER

/s/ Anthony L. Uremovich 9-04-01
DESIGN STANDARDS ENGINEER DATE

/s/ Firooz Zandi 9-04-01
CHIEF HIGHWAY ENGINEER DATE